To Lara

ESSAYS ON FINANCIAL CONNECTIVITY AND STABILITY

The Graduate School of Economics and Social Sciences
of
İhsan Doğramacı Bilkent University

by

MÜGE DEMİR

In Partial Fulfillment of the Requirements for the Degree of
DOCTOR OF PHILOSOPHY IN MANAGEMENT

THE DEPARTMENT OF MANAGEMENT
İHSAN DOĞRAMACI BİLKENT UNIVERSITY
ANKARA

November 2019

I certify that I have read this thesis and have found that it is fully adequate, in scope and in quality, as a thesis for the degree of Doctor of Philosophy in Finance.

Assoc. Prof. Dr. Zeynep Önder
Supervisor

I certify that I have read this thesis and have found that it is fully adequate, in scope and in quality, as a thesis for the degree of Doctor of Philosophy in Finance.

Prof. Dr. Nadir Öcal
Examining Committee Member

I certify that I have read this thesis and have found that it is fully adequate, in scope and in quality, as a thesis for the degree of Doctor of Philosophy in Finance.

Assoc. Prof. Dr. Süheyla Özyıldırım
Examining Committee Member

I certify that I have read this thesis and have found that it is fully adequate, in scope and in quality, as a thesis for the degree of Doctor of Philosophy in Finance.

Prof. Dr. Nuray Güner
Examining Committee Member

I certify that I have read this thesis and have found that it is fully adequate, in scope and in quality, as a thesis for the degree of Doctor of Philosophy in Finance.

Assist. Prof. Dr. Fitnat Banu Pakel
Examining Committee Member

Approval of the Institute of Economics and Social Sciences

Prof. Dr. Halime Demirkan
Director

ABSTRACT

ESSAYS ON FINANCIAL CONNECTIVITY AND STABILITY

Demir, Müge
Ph.D. in Department of Management
Supervisor: Assoc. Prof. Dr. Zeynep Önder

November 2019

This thesis investigates the structure of cross-border lending market by using network analysis and examines the relationship between financial connectivity and probability of systemic crises, controlling for macroeconomic variables. A country-level panel data set of BIS locational banking statistics for bank-to-bank and bank-to-non-bank cross-border lending markets including 177 countries is used in the analysis for the 1978-2016 period. Systemic crisis periods are retrieved from European Systemic Risk Board (Lo Duca et al. (2017)) and Laeven and Valencia (2013, 2018). In the literature, there are two conflicting arguments on the relationship between financial connectivity and stability. On the one hand, it is argued that an increase in the level of financial connectivity enhances financial stability by allowing financial institutions to absorb the negative impacts of a shock among many counterparties through risk sharing. On the other hand, depending on the structure of the financial markets, it can also deteriorate financial stability by facilitating the spread of a shock from one institution to another, leading to an increase in systemic risk. We, first, examine cross-border bank-to-bank and bank-to-non-bank lending markets of 13 advanced economies. We find that an increase in financial connectivity reduces the probability of systemic crises. However, this effect is found to be mitigated or completely eliminated in credit boom and capital inflow upsurge periods in both

lending markets. Second, we examine European bank-to-bank and bank-to-non-bank cross-border lending markets comprised of 25 countries, during 1978-2016 period, as it allows us to test the effect of the level of financial integration measured by the level of financial connectivity on the probability of crisis. We find that while using the single currency, Euro, helps to improve the resiliency of EU in response to crisis in both networks, legislative-regulatory integration across member states without eliminating currency risk undermines the resiliency of the EU bank-to-bank lending network. During the excessive cross-border lending period, an increase in connectivity is found to raise the probability of crisis for both lending networks, regardless of the membership status. Finally, we extend our data set to 177 countries and examine the relationship between financial connectivity and stability in the global lending network. We find that in bank-to-bank lending network, an increase in global financial connectivity decreases the probability of crises, but this effect is found to be eliminated only in credit boom periods. On the other hand, an increase in local connectivity is found to be associated with an increase in the probability of crisis. This effect seems to be mainly driven by emerging countries, rather than advanced countries. In both lending markets we find that capital inflow periods do not affect the relationship between connectivity and probability of crisis. The findings suggest that policy-makers should design a financial market mechanism that can reduce risks associated with an increase in financial connectivity, while maintaining its benefits.

Keywords: Cross-border Banking, Financial Connectivity, Network Analysis, Systemic Crises

ÖZET

FİNANSAL BAĞLANTILILIK VE İSTİKRAR ÜZERİNE MAKALELER

Demir, Müge
Doktora, İşletme
Tez Danışmanı: Doç. Dr. Zeynep Önder

Kasım 2019

Bu tez, ağ analizi kullanarak sınır ötesi kredi piyasasının yapısını araştırmış ve makroekonomik değişkenleri kontrol ederek, finansal bağlantılılık ve sistemik kriz olasılığı arasındaki ilişkiyi incelemiştir. 1978-2016 dönemi için yapılan analizde, 177 ülkenin bankalar arası ve bankadan banka olmayan sektöre sınır ötesi borç verme piyasaları için BIS yerel bankacılık istatistikleri veri setinden elde edilen ülke düzeyinde panel veri kullanılmıştır. Sistemik kriz dönemleri Avrupa Sistemik Risk Kurulu (European Systemic Risk Board, Lo Duca et al. (2017)) ve Laeven ile Valencia (2013, 2018) çalışmalarından elde edilmiştir. Literatürde, finansal bağlantılılık ve istikrar arasındaki ilişki konusunda iki farklı görüş yer almaktadır. Bir taraftan, finansal bağlantılılık seviyesindeki bir artışın, şokun olumsuz etkilerinin pek çok finansal kurum arasında paylaşılması yoluyla absorbe edilmesine olanak sağladığı ve finansal istikrarı artırdığı iddia edilmektedir. Diğer taraftan, finansal piyasaların yapısına bağlı olarak, şokun bir kurumdan diğerine yayılmasını kolaylaştırarak finansal istikrarı bozabileceği ve sistemik riskte artışa neden olabileceği iddia edilmektedir. Öncelikle, 13 gelişmiş ekonominin bankalar arası ve bankadan banka olmayan sektöre sınır ötesi borç verme piyasaları incelenmiş ve finansal bağlantılılıktaki bir artışın sistemik kriz olasılığını azalttığı tespit edilmiştir. Bununla birlikte, bu etkinin

kredi patlaması ve sermaye girişi artış dönemlerinde hem bankalar arası hem de bankadan banka olmayan sektöre sınır ötesi borç verme piyasalarında hafifliği veya tamamen ortadan kalktığı bulunmuştur. İkinci olarak, 1978-2016 döneminde, 25 ülkeden oluşan Avrupa sınır ötesi bankalar arası ve bankadan banka olmayan sektöre borç verme piyasaları incelenmiştir. Bu piyasanın incelenmesi finansal bağlantılılık seviyesi ile ölçülen çeşitli seviyelerdeki finansal bütünleşmenin kriz olasılığı üzerindeki etkisini incelemeye imkan tanımıştır. Tek para birimi olan Avro kullanımının, AB'nin her iki ağdaki krize karşı dayanıklılığını artırmaya yardımcı olduğunu, ancak üye devletler arasında kur riskini ortadan kaldırmadan yapılan yasama-düzenleyici bütünleşmenin AB'nin bankalar arası sınır ötesi kredi piyasasında direnci zayıflattığı görülmüştür. Sınır ötesi aşırı borç verme döneminde, üyeliğin durumuna bakılmaksızın her iki borç verme ağı için finansal bağlantılılıktaki artışın kriz olasılığını artırdığı bulunmuştur. Son olarak, veri setimizi 177 ülkeye genişleterek analiz süreci boyunca global kredi piyasaları ağındaki finansal bağlantılılık ve istikrar arasındaki ilişki incelenmiştir. Bankalar arası borç verme ağında, küresel finansal bağlantılılıktaki bir artışın kriz olasılığındaki bir düşüşle ilişkili olduğu bulunmuş, ancak bu etkinin sadece kredi patlaması dönemlerinde ortadan kalktığı tespit edilmiştir. Öte yandan, yerel bağlantılılıktaki bir artışın kriz olasılığındaki bir artışla ilişkili olduğu bulunmuştur. Bu etkinin, gelişmiş ülkelerden ziyade gelişmekte olan ülkelerden kaynaklandığı görülmüştür. Her iki borç verme piyasasında da sermaye girişi dönemlerinin bağlantılılık ve kriz olasılığı arasındaki ilişkiyi etkilemediği görülmüştür. Bulgular, politika yapıcının finansal bağlantılılıktaki artışın faydalarını korurken, bununla ilişkili riskleri azaltabilecek bir piyasa mekanizması tasarlamayı hedeflemesi gerektiğini göstermiştir.

Anahtar Kelimeler: Ağ Analizi, Finansal Bağlantılılık, Sınır Ötesi Bankacılık, Sistemik Krizler

ACKNOWLEDGEMENTS

First and foremost, I would like to express my gratitude to my advisor, Assoc. Prof. Zeynep Önder for her constant support throughout my Ph.D. studies. I am thankful for the trust she has put on me. I sincerely hope that I continue to work with her long into the future.

Second, I would like to thank the members of my thesis committee Assoc. Prof. Süheyla Özyıldırım and Prof. Nadir Öcal, for their valuable time and comments throughout my dissertation research.

My special appreciation is reserved for Prof. Tanju Yorulmazer, who gave me the opportunity to visit University of Amsterdam. The time I spent there turned out to be a quite productive period for my Ph.D. studies. Moreover, I would like to thank Assist. Prof. Günseli Tümer Alkan for her kindness and support throughout my visit.

Special thanks to the Faculty of Business Administration at Bilkent University for giving me a solid background and the opportunity to carry out my doctoral research. I would like to also thank Assist. Prof. Ahmet Şensoy for his encouragement and kind words at critical moments. Moreover, I would like to thank the members of our administrative staff for their constant assistance.

I am forever grateful to my mother Emel Esim and my beloved husband Engin Demir, for their constant, unconditional love and support, and for encouraging me to pursue my interests.

In addition, I would like to thank İdil Ayberk, Pelin Sümer, Murat Tiniç, Zeynep Akgül and Meltem Baştan for their invaluable friendship and their support throughout my dissertation research .

I gratefully acknowledge the financial support provided by the Jean Monnet Scholarship Program Committee for funding part of this thesis.

TABLE OF CONTENTS

LIST OF TABLES

LIST OF FIGURES

CHAPTER I

INTRODUCTION

1.1. Overview

This dissertation explores the structure of bank-to-bank and bank-to-non-bank cross-border lending markets and examines the relationship between financial connectivity across countries and probability of crises by using network analysis. Network analysis allows us to model complex linkages across countries and to understand the structure of the cross-border lending market and to measure its connectivity.

In the literature there are two conflicting arguments on the relationship between financial connectivity and stability. Based on a Diamond and Dybvig (1983) model, Allen and Gale (2000) show that in a fully integrated economy without frictions the higher the level of financial connectivity across agents, the higher the resiliency of the financial markets. However, there could be important deviations from this result in real world examples, as observed in the recent global financial crisis. Depending on the structure of the financial markets, an increase in financial connectivity can also deteriorate financial stability by facilitating the spread of a shock from one institution to another, leading to an increase in systemic risk. For example, Gai and Kapadia (2010) show that higher connectivity decreases probability of default, but once contagion begins, rise in connectivity increases

probability of default. Acemoglu et al. (2015) show that the extent of contagion across financial institutions determines the relationship between financial connectivity and stability. In particular, financial networks in which banks are highly connected would be more resilient to shocks when the magnitude of negative shock is below a certain threshold; but above this threshold, financial connections deteriorate the resiliency of the system through shock propagation. Nier et al. (2007) find that at low levels of connectivity, even a small amount of increase in connectivity rises the probability of contagion, but at higher levels of connectivity, any increase in connectivity improves system's resilience to shocks. By introducing different market characteristics such as excessive liquidity, imperfect information, moral hazard, asymmetric information, and indirect asset price contagion channels, Battiston et al. (2012a), Brusco and Castiglionesi (2007), Battiston et al. (2012b), Elliott et al. (2014), Caballero and Simsek (2013), Allen et al. (2012), and Caccioli et al. (2014) show that an increase in financial connectivity does not necessarily ensure financial stability.

Theoretical and empirical literature indicates that financial stability of the system is crucially dependent on the level of financial connectivity. Yet, how and in which direction financial connectivity affects financial stability are not clear. This research, first contributes to this debate by investigating the relationship between probability of crisis and connectivity during normal, credit boom, and capital inflow periods, as excessive liquidity periods have a potential to cause systemic crisis by facilitating negative spillover effects across countries through cross-border holdings. In particular, empirical literature shows that credit boom and capital inflow periods at which financial markets are exposed to excessive liquidity, are associated with higher probability of crisis and instabilities in developed countries (e.g., Caballero, 2014; Jordà et al., 2011; Schularick and Taylor, 2012). Second, we analyze the relationship between connectivity and stability for different borrower

types (banks and non-banks), as differences in characteristics of the borrowing sector may affect the relationship between financial connectivity and the probability of crisis. For example, since bank-to-non-bank lending has a potential to be channeled into real economy through investments it may not lead to credit booms. Avdjiev et al. (2018) show that bank-to-bank cross-border lending is associated with credit booms whereas bank-to-non-bank lending is associated with credit busts. As another contribution, in examining the relationship between financial stability and connectivity, we calculate the financial connectivity both at global and at individual country levels. Fourth, we analyze the relationship between connectivity and stability within European cross-border lending market and show that while using the single currency, Euro, helps to improve the resiliency of European Union (EU) in response to crisis in both networks, legislative-regulatory integration across member states without eliminating currency risk damages the resiliency of the EU financial system for bank-to-bank lending network. Finally, the time coverage of the data allows us to analyze not only the recent global financial crisis of 2007-2008, but also all systemic crises in 177 countries and all systemic and idiosyncratic crisis in 25 European countries within the period of 1978–2016.

Throughout the analysis, a country-level panel data set for those countries is used for the 1978–2016 period. Cross-border flows are obtained from Bank for International Settlements (BIS) Locational Banking Statistics (LBS).

In the second chapter of this thesis, we analyzed cross-border bank-to-bank and bank-to-non-bank lending markets of 13 advanced economies because any crisis initiated in the developed countries is likely to have more detrimental effects on the rest of the world, as observed in the recent global financial crisis of 2007-2008. In this chapter, we try to answer the following questions for bank-to-bank and bank-to-non-bank cross-border lending markets: (i) is there a relationship between financial connectivity and financial stability measured by probability of systemic

crisis? (ii) does the observed relationship between financial stability and financial connectivity among countries change in credit boom and capital inflow periods? We find that a rise in financial connectivity reduces the probability of systemic crises. However, this effect is found to be mitigated or completely eliminated in credit boom and capital inflow upsurge periods in both markets.

In the third chapter, we examine bank-to-bank and bank-to-non-bank cross-border exposures across 25 European countries, including core members of European Union (EU), as well as candidate countries which joined the EU before the end of our analysis period, in the year 2016. Establishment of EU as early as 1958 and introduction of the Euro as a common currency in 1999 are important steps towards the financial integration of EU. To understand whether deeper financial integration is beneficial for the resiliency of the overall system, we analyze the European cross-border lending market as it allows us to test the effect of the differing levels of financial integration through time on the probability of systemic as well as idiosyncratic crises. In this chapter, we try to answer the following research questions for bank-to-bank and bank-to-non-bank cross-border lending market of 25 European countries during 1978-2016 period: (i) did legislative-regulatory integration of member states through EU membership enhance the positive effect of financial connectivity on financial stability, as documented by the theoretical literature? (ii) did the elimination of currency risk through single currency, Euro, contribute to financial stability benefits of connectivity? (iii) did being an EU and Eurozone (EUZ) member change these benefits during the pre-crisis period of 2004-2007 in which cross-border exposures rise rapidly and uninterruptedly? We find that while using the single currency, Euro, helps to improve the resiliency of EU in response to crisis in both networks, legislative-regulatory integration across member states without eliminating currency risk damages the resiliency of the EU in bank-to-bank lending network. During the excessive cross-border lending period,

an increase in connectivity is found to raise the probability of crisis for both lending networks, regardless of the membership status.

In the last chapter, we extend the coverage of our financial network to 177 countries, including advanced as well as emerging countries. This enables us to construct the global lending network and examine whether the relationship documented between financial connectivity and stability and the interplay between this relationship and credit boom and capital inflow periods for cross-border lending network of advanced economies change for the global cross-border lending network. We also test whether the so-called relationship between connectivity and stability change for emerging countries during excessive liquidity periods. As in the previous chapters, we analyze bank-to-bank and bank-to-non-bank lending networks separately for the 1978-2016 period. We find that in bank-to-bank lending network, an increase in global financial connectivity is found to be associated with a decline in the probability of crises, but this effect is found to be eliminated in credit boom periods, only. On the other hand, an increase in local connectivity is found to be associated with an increase in the probability of crisis. This relationship seems to be driven by emerging countries. In both lending markets we find that capital inflow periods do not affect the relationship between connectivity and probability of crisis.

CHAPTER II

FINANCIAL CONNECTIVITY AND EXCESSIVE LIQUIDITY: BENEFIT OR RISK?[1]

2.1. Introduction

The global financial crisis (GFC) has increased the interest in understanding the relationship between financial connectivity and financial stability. In the literature there are two conflicting arguments on this relationship. On the one hand, it is argued that increase in the level of financial connectivity enhances financial stability by allowing financial institutions to absorb the negative impacts of a shock among many counterparties through risk sharing (Allen and Gale, 2000). On the other hand, depending on the structure of the financial market, it can also deteriorate financial stability by facilitating the spread of a shock from one institution to another, leading to an increase in systemic risk (for example, Gai and Kapadia, 2010; Nier et al., 2007). In this study, we analyze the relationship between financial stability and financial connectivity in bank-to-bank (BB) and bank-to-non-bank (BNB) cross-border lending market of 13 advanced countries[2] during the 1978-2016 period. We employ network analysis which is a useful tool for

[1] This chapter is published in Demir and Önder (2019).

[2] We examine only advanced countries because any crisis initiated in the developed countries is likely to have more detrimental effects on the rest of the world, as observed in the recent GFC. Cross-border flows among these countries represent more than 85% of global cross-border flows.

modelling linkages across countries in order to understand the structure of the cross-border lending market and to measure its connectivity.[3]

We try to answer the following questions: (i) is there a relationship between financial connectivity and financial stability measured by probability of systemic crisis? (ii) does the observed relationship between financial stability and financial connectivity among advanced economies change in credit boom and capital inflow periods? Excessive liquidity periods have a potential to cause systemic crisis by facilitating negative spillover effects across countries through cross-border holdings, as observed in the recent GFC. Empirical literature show that credit boom and capital inflow periods at which system is exposed to excessive liquidity, are associated with higher probability of crisis and instabilities in developed countries (e.g., Caballero, 2014; Jordà et al., 2011; Schularick and Taylor, 2012).

We analyze cross border flows[4] going to banking and non-banking sector, separately, because differences in characteristics of the borrowing sector may affect the relationship between financial connectivity and the probability of crisis. For example, cross-border lenders incur higher monitoring efforts with respect to the non-bank borrowers (e.g. Avdjiev et al., 2018; Martinez, 2015). The shorter maturity of BB loans compared to BNB loans makes it easier to cut back lending and may cause instabilities (Aiyar et al. (2014). The relation between the borrowing sector and the phase of the credit cycle that the economy underwent are likely to affect the relationship between the probability of crisis and the level of connectivity in each lending market. In Avdjiev et al. (2018) study, while BB cross-border lending is found to be associated with credit booms, BNB lending is found to be associated with credit busts. One may expect this result as BB lending

[3]For examples of the use of network analysis to examine financial crisis, see Allen et al. (2009). For review of different applications of network analysis in finance, see Allen and Babus (2009).

[4]The importance of analyzing cross-border capital flows for macroprudential policymakers is discussed in the Amiti et al. (2019) study.

has a potential to accelerate money creation process, leading to a credit boom whereas BNB lending has a potential to be channeled to real economy through investments.

Our work contributes to the literature in three ways. First, we show that the observed relationship between financial connectivity and the probability of crisis changes during excessive liquidity periods, represented by credit boom and capital inflow periods in both networks. Second, we show that this relationship also depends on the type of the borrowing sector: banking versus non-banking. Third, the time coverage of the data allows us to analyze all systemic crises within the period of 1978-2016, including the recent GFC as well as the 2014 European debt crisis.

We find that an increase in the level of financial connectivity among advanced economies reduces the probability of systemic crises controlling for macroeconomic and other country characteristics. However, this effect is found to be mitigated or completely eliminated in credit boom and capital inflow periods. In particular, we find that an increase in the level of connectivity has a substantial destabilizing effect during credit boom periods in BB lending market, but we do not observe this effect in BNB lending market. On the other hand, an increase in the level of connectivity during capital inflow periods is found to have destabilizing effects in both markets, but the effect is found to be limited to short-term in the BNB lending market. The results of network analysis indicate that cross-border flows and connectivity decrease considerably in the year when the GFC hit a country; a funding shift may have occurred from bank towards non-bank sector lending during crisis periods; and BNB lending market is more stable both in terms of the number and the amount of lending relationships and recovered faster than the BB lending market following the GFC.

2.2. Literature Review

This study is related to two lines of literature. The first line of literature argues that the financial stability of the system depends crucially on the level of connectivity among financial institutions. In their pioneering work, Allen and Gale (2000), based on a Diamond and Dybvig (1983) model, show that complete networks, in which all possible symmetric bilateral relationships exist among banks, are much more resilient to liquidity shocks than incomplete networks, in which banks are only linked to one neighbor. The theoretical literature developed in the aftermath of the GFC has challenged the view that an increase in connectivity ensures financial stability (see Gai and Kapadia (2010), Battiston et al. (2012a),Brusco and Castiglionesi (2007), Battiston et al. (2012b), Elliott et al. (2014), Caballero and Simsek (2013), Allen et al. (2012), Caccioli et al. (2014), Acemoglu et al. (2015)). This line of literature argues that the assumptions of the Allen and Gale model are extremely simplifying and do not reflect real complex linkages among financial institutions. They modify the assumptions of the Allen and Gale model by introducing different market characteristics such as imperfect information, moral hazard, asymmetric information, heterogeneity in terms of shock size, and indirect asset price contagion channels. For example, by extending the assumptions of the Allen and Gale model, Gai and Kapadia (2010) demonstrate that higher connectivity decreases probability of default, but once contagion begins, rise in connectivity increases probability of default. More recently, Acemoglu et al. (2015) show that the extent of contagion across financial institutions determines the relationship between financial connectivity and stability. In particular, financial networks in which banks are highly connected would be more resilient to shocks when the magnitude of negative shock is below a certain threshold; but above this threshold, financial connections deteriorate the

resiliency of the system through shock propagation. The main implication is that increase in financial connectivity could damage the resiliency of the system whenever the amount of total interbank lending within the market is large. Tonzer (2015), by investigating banking systems of 18 advanced economies during 1994-2012 period, reports that cross-border interbank linkages across countries could serve as an important channel of banking risk in financial turmoil times. It is important to note that although there are several theoretical studies showing that the relationship between financial connectivity and stability changes under different market characteristics, the empirical literature is relatively scarce.

The second line of literature that this study is related to argues that credit boom and capital inflow periods are associated with higher probability of crisis in developed countries. For example, Schularick and Taylor (2012) show that credit booms increase probability of crisis and amplify moral hazard and adverse selection problems in 14 developed economies during 1870-2008 period. By using the same data-set, Jordà et al. (2011) report that for developed countries credit booms are found to be the single best predictor of financial instabilities and that capital inflows also plays role in increasing probability of crisis. This finding is supported by Caballero (2014) who shows that capital inflow upsurges increase probability of crisis from 4 percent to 14 percent, using 47 crisis periods experienced in 57 countries.

2.2.1 Empirical Literature

Empirical part of this study is related to the literature that uses network methodology to measure financial connectivity across financial institutions or countries. In measuring financial connectivity, we use network methodology because it allows us to assess not only the connectedness of the global lending network, but also how centrally located a country is within that network, and how

much that country is exposed to risks emanating from the relationships it has established among its neighbours, both in terms of the number and the amount of cross-border lending relationships [5].

Several studies examine the characteristics of the bank-to-bank lending network before and during the financial crisis. For example, by using the BIS cross-country data set similar to ours, Minoiu and Reyes (2013) show that the level of financial connectivity measured by network density is pro-cyclical for 184 countries during 1978-2010; it rises before banking and debt crises and diminishes in the aftermath. Although the coverage of network used by the authors are larger than ours, our results support this view by suggesting that cross-border flows and connectivity decrease considerably on the date when the recent GFC first hits a country, but tend to increase afterwards in both networks. In an another study, Chinazzi et al. (2013) find that network density decreased, but the asymmetry of network statistics increased in the recent GFC for global cross country equity and debt markets of 70 countries. Hattori and Suda (2007) construct a network of cross-border bank exposures during the 1985-2006 period, for 215 countries, by using BIS consolidated cross-border exposure data, and find that the connectivity of the global banking network as measured by several network statistics has increased over time. Using more granular dataset, Hale (2012) studies syndicated loan market to construct a bank level network of bank-to-bank exposures during 1980-2010, and demonstrates that the connectivity of the network has increased

[5] There are alternative ways of measuring financial connectivity. For example, Tonzer (2015) measures financial connectivity as the ratio of the sum of a country's exposures within that network to the GDP and banking sector assets of that country. However, these measures do not show the position and importance of a country within the network. When the bilateral exposure data among financial institutions was not available, correlations among asset returns of financial institutions are widely employed in the literature (for example, see Billio et al. (2012)) to capture increased communalities across asset returns. Yet, the correlations specify the relationships between countries, but not within a network. Connectivity could also be measured through the return and volatility spillovers proposed by Diebold and Yilmaz (2009) and Diebold and Yılmaz (2014) (for example, see Chevallier et al. (2018) and Dungey et al. (2018)). Although this measure gives insights about bilateral connections and transmission of shocks across countries, it does not reflect how the overall network and the connections across countries evolve over time within that network.

over time, but the distributions of network measures used in the analysis have become more skewed and asymmetric. Kubelec and Sá (2012) support the view that the level of connectivity has increased over time, by using stock bilateral external asset and liabilities data of 18 countries during the 1980-2005 period. However, none of these studies examines the network characteristics of bank to non-bank lending market and assess its relationship with financial stability.

There are studies that examine the explanatory power of financial connectivity measured by network statistics as an early warning indicator. They find that financial connectivity has an early warning potential in predicting the incidence and the severity of crisis. For example, Minoiu et al. (2015) construct a global banking network by using BIS data on locational cross-border exposures of countries during the 1978-2010 period, and demonstrate that financial connectivity has early warning potential in predicting systemic banking crisis, especially for the recent GFC. Chinazzi et al. (2013), by using bilateral cross country debt flows and equity investments data during the 2007-2008 period for 70 countries, show that higher connectivity reduces the severity of the crisis, yet, centrally located countries within the network are more vulnerable in times of crisis. Studies using more granular bank level data sets have similar implications. For example, Caballero (2015) estimates a financial integration measure based on several network statistics (indegree, outdegree, betweenness, clustering coefficients, authority, and hub centrality) for interbank syndicated loan market and argue that financial integration measure has explanatory power in predicting the incidence of banking crisis. Although our aim is not to study the early warning power of financial connectivity as derived from network statistics, we use these outcomes as a rationale for examining the relationship between financial connectivity and stability.

In the literature, some studies examine the relationship between financial

connectivity and stability by simulating the possible impacts of a shock resulting from the failure of one or more financial institutions on the rest of the financial network. Some of these papers use actual balance sheet data (see for example, Dasgupta (2004); Degryse and Nguyen (2007); Furfine (2003); Gai and Kapadia (2010); Iyer and Peydro (2011); Levy-Carciente et al. (2015); Nier et al. (2007); Upper and Worms (2004)), and some of them use predicted balance sheet data (see for example, Mistrulli (2011); Paltalidis et al. (2015); Wells (2004)) due to the lack of bilateral, disaggregated data on bank exposures. In simulating shocks, they assume that total interbank exposures are equally distributed across banks. However, this is a strong assumption that might affect the reliability of the results. Also, simulation studies often provides results for one country at a specific time period that can not be generalized.

2.3. Methodology

2.3.1 Hypotheses and Empirical Model

Based on the existing literature, first we test whether there is a negative relationship between financial connectivity and the probability of systemic crisis, controlling for macroeconomic and country characteristics. Second, we test whether the observed relationship changes in credit boom and capital inflow periods at which there is excessive liquidity in the market. Hypotheses are tested separately for BB and BNB lending networks.

The following probit models are estimated to test the hypotheses by using the annual bilateral cross-border exposures of 13 advanced economies [6] during the 1978-2016 period:

[6] These countries are Belgium, Denmark, France, Finland, Germany, Ireland, Japan, Luxembourg, Netherlands, Sweden, Switzerland, UK and US.

$$P(crisis_{it} = 1 \mid C_{it}, D_{it}, X_{it}) = \Phi(\alpha_i + \beta_1.C_{it} + \beta_2.D_{it} + \Gamma.X_{it}) \tag{2.1}$$

$$P(crisis_{it} = 1 \mid C_{it}, D_{it}, X_{it}) = \Phi(\alpha_i + \beta_1.C_{it} + \beta_2.D_{it} + \beta_3.C_{it}.D_{it} + \Gamma.X_{it}) \tag{2.2}$$

where i and t stand for country and time, respectively. The dependent variable is a financial stability indicator that takes a value of 1 if there is a systemic crisis in country i in year t, and 0; otherwise. C_{it} represents financial connectivity measure. It is measured for the overall network (globally) and for individual countries (locally). D_{it} corresponds to a dummy variable taking a value of 1 in credit boom or capital inflow periods, and 0; otherwise. X_{it} represents a vector of macroeconomic control variables and α_i represents the country fixed effects. The models are estimated with the lagged values of connectivity measures and dummy variables, as well to analyze whether the impact of financial connectivity and excessive liquidity on the probability of crisis changes with lag.

Financial connectivity is calculated by using three connectivity measures of network analysis. The first one measures connectivity of the overall network. The other two measure the unweighted and weighted connectivity of a country where weights are determined by the normalized cross-border flows between any two countries. These measures are calculated for BB and BNB lending networks, separately. We also investigate whether the results are sensitive to the connectivity measure used in the analysis.

Based on the results of Allen and Gale (2000), the coefficient of β_1 is expected to be negative; that's an increase in financial connectivity would reduce the probability of crisis through risk-sharing and liquidity allocation. In credit boom

and/or capital inflow periods, we expect this effect to deteriorate because increased liquidity could facilitate the distribution of negative spillovers among countries, as documented in the theoretical and empirical literature. Hence, the coefficient of the interaction variable between financial connectivity and the dummy variable indicating credit boom or capital inflow periods, namely β_3, is expected to be positive. The significance of this coefficient will be more pronounced in the BB lending network than the BNB lending network because banking sector lending may enhance credit boom through money creation process whereas BNB lending does not enhance booms as loans are channelled into real economy. Finally, both theoretical and the empirical literature predicts a positive coefficient for dummy variables indicating capital inflows and credit boom periods, as booms and inflows are found to be associated with financial crisis in developed countries.

2.3.2 Definition of Variables

Crisis Variable: We use the systemic crisis definition of the European Systemic Risk Board (Lo Duca et al., 2017). They determine the start and the end dates of crises in European countries by using a quantitative approach based on a financial stress index and an expert judgment from national and European authorities. They assume that a crisis starts if at least one of the following occurs in that year: "(i) the emergence of systemic financial stress in asset markets, (ii) the first policy response in relation to the crisis, or (iii) the first failure of a major market player, depending on which date is earlier and/or considered appropriate by national authorities (Lo Duca et al., 2017)." The end date of a crisis is defined as a date when the post crisis adjustment period is completed, and fiscal and monetary policies become broadly neutral.[7] The systemic crisis dates for 11 EU countries are

[7] Lo Duca et al. (2017) propose two approaches regarding the end date of the crisis; end of crisis management date and system back to normal date. The former one points out the end of the acute phase of the crisis and does not include post-crisis adjustment period. We adopt the second approach to become more conservative in our crisis definition, as systemic risk may increase during

taken from Lo Duca et al. (2017). The crisis dates for Japan and US are retrieved from Laeven and Valencia (2013).[8]

Financial Connectivity Measures:[9] Financial connectivity measures are calculated by using network analysis. In the network analysis, each country represents a node, and cross-border lending relationships across countries represent links. The links are weighted by normalized cross border flows across countries. The network is assumed to be directed as there are cross border flows from a lender to a borrower country, but not necessarily vice versa. Each year is modelled as a separate, weighted and directed network. Three measures are used in estimating financial connectivity. They are network density (also known as global financial connectivity, FC), binary clustering coefficient (BCC), and weighted clustering coefficient (WCC).

FC measures the global connectivity level of a network in the year t. It is defined as the number of links observed in the network divided by the total possible number of links. It represents the probability of a connection between two countries in the network. This statistic is widely used in the literature to define the topology of the overall network (see Minoiu and Reyes, 2013; Minoiu et al., 2015; Chinazzi and Fagiolo, 2013; Hale, 2012; Hattori and Suda, 2007; Caballero, 2015).

The second connectivity variable, BCC measures a country's own level of (i.e., local) connectivity within the network. It expresses the likelihood that any two

the adjustment period and countries may experience another crisis.

[8]Lo Duca et al. (2017) specify the systemic crisis dates for the European countries as follows: Belgium (2008-2016), Switzerland (1991-1994; 2010-2016) Germany (2001-2004; 2007-2016), Denmark (1987-1994; 2008-2013), Finland (1991-1998), France (1991-1999; 2008-2016), United Kingdom (1991-1994; 2007-2016), Ireland (2008-2016), Luxembourg (2008-2016), Netherlands (2008-2016), and Sweden (1991-1997; 2008-2016). According to Laeven and Valencia (2013), the crisis dates for Japan is the period of 1997-2001, and for US it is 1988 and the period of 2007-2011.

Although we use the systemic crisis dates suggested by the European Systemic Risk Board for European countries, we also estimate the models by using the banking crisis dates suggested by Laeven and Valencia (2013) for all countries in the sample. The results are discussed in the Robustness Tests section in detail.

[9]For technical definitions and detailed discussions of connectivity measures and other network statistics, see Network Measures section in Appendix A.

counterparties of a country are also counterparties of themselves. In other words, it is the probability that two counterparties of a country are connected to each other, so that all three form a closed triangle pattern relationship. In estimating financial connectivity, BCC assumes an unweighted and directed network. Similar to FC, BCC ignores the amount of cross-border flows between countries and considers only the number of lending relationships across countries. Its value ranges between 0 and 1; such that the higher the value of the BCC, the higher the probability of the country to form tightly connected neighborhoods.[10]

The third measure of financial connectivity, WCC also measures a country's local connectivity level. Unlike BCC, it calculates the weighted probability that two counterparties of a country are also counterparties among themselves by putting more weight on stronger interactions with higher amount of cross-border flows. The weighted network analysis is particularly essential because it might provide different insights regarding the network characteristics, as there has been significant increase in size of the cross-border flows during recent years. By definition, the higher the BCC and cross-border flows, the higher the value of WCC; the higher the number of countries that country of interest borrows or lends (i.e.counterparties of a country), the lower the WCC, due to the denominator effect. Any increase in WCC implies that cross-border flows grow faster than the

[10]BCC takes into account the direction of linkages across countries with given flow patterns, as shown in the figure below.

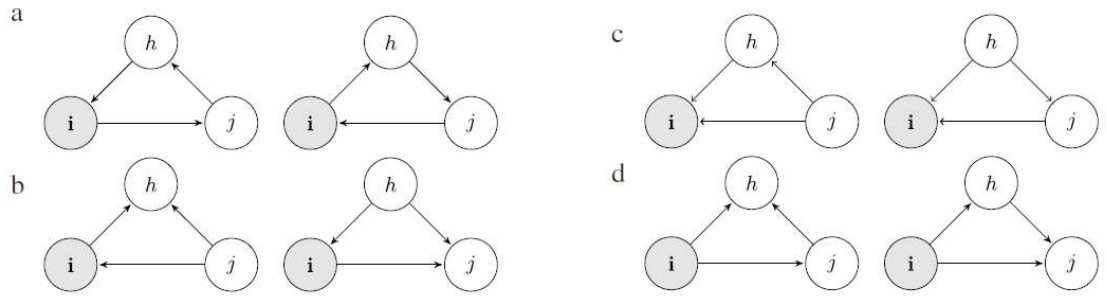

Source: Tabak et al., 2014.

number of the counterparties of a country.[11]

Credit Boom and Capital Inflow Periods: These periods are used to define excessive liquidity periods. To identify credit boom periods, we apply Hodrick-Prescott (HP) filter to the percentage growth rate of private-credits-to-GDP ratio[12] and obtain de-trended series for each country and each year. If the de-trended series in a year for a country is one standard deviation above its country related historical average, that year is assumed to be a credit boom period for that country, as in Fielding and Rewilak (2015) and Caballero (2014). The credit boom dummy variable ($CreditBoom_{it}$) takes the value of 1 in country i, at time t for credit boom periods, and 0 otherwise.

[11]

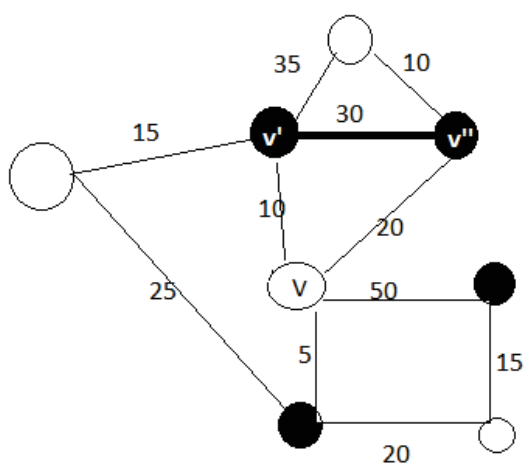

Example: The figure in the left hand side shows a hypothetical bidirectional (i.e. there is a two-way relationship between each node) weighted network composed of eight nodes ($|V|= 8$) and eleven bidirectional links ($|E|= 2*11$) across the nodes. For a given node v, N_v is defined to be the number of adjacent nodes of v and $b(v', v'')$ is defined to be the number of links between neighbours of v such that $N_v = 4$ and $b(v', v'') = 2*1$, as links are bidirectional. Weights are normalized to 1. Then, the global (FC) and local (BCC and WCC) connectivity measures are calculated as follows:

$$FC = \frac{|E|}{|V|\times(|V|-1)} = \frac{2*11}{8*(8-1)} = \frac{11}{28}$$

$$BCC(v) = \frac{\sum_{v',v''\in N_v} b(v', v'')}{|N_v|\times(|N_v|-1)} = \frac{2*1}{4*3} = \frac{2*1}{4*3} = \frac{1}{6}$$

$$WCC(v) = \frac{\sum_{v',v''\in N_v} w(v', v'')}{|N_v|\times(|N_v|-1)} = \frac{(2*1)*30*\frac{1}{50}}{4*3} = \frac{1}{10}$$

[12]Private-credits-to-GDP is defined as a ratio of loans provided to the private sector by domestic money banks to GDP. Using the ratio of private-credit-to-GDP, instead of the level of private credits, allows us to correct for pro-cyclical bank lending because the level of private credits is adjusted with the size of the economy.

Capital inflow dates during the 1978-2008 period are taken from Reinhart and Reinhart (2008). The method proposed by Caballero (2014) and Fielding and Rewilak (2015) is used to identify those dates for the rest of the sample. Using HP filter, we obtain the de-trended series of the ratio of foreign direct investment-to-GDP for each country and the year. If the de-trended series in a year for a country is one standard deviation above its country related historical average, that year is assumed to be a capital inflow period for that country. Capital inflow dummy variable ($CapitalInflow_{it}$) takes the value of 1 in country i, at time t for capital inflow periods, and 0 otherwise.

Control Variables: The control variables are macroeconomic indicators that are widely used in the literature to examine the probability of crisis (see for example, Demirguc-Kunt and Detragiache, 1998; Demirgüç-Kunt and Detragiache, 2005; Minoiu et al., 2015). They include[13] real GDP per capita, real effective exchange rate, private credit-to-GDP ratio, current account balance-to-GDP ratio, M3 money-to-GDP ratio, and unemployment rate. As suggested by Tonzer (2015), we also include the Herfindahl-Hirschman banking sector concentration index (HHI) in the model. It is measured as the summation of the squared value of the lenders' share in borrower country's total inflows, calculated separately for each borrower country in each network. In order to control for any other unobserved, time-invariant, country specific factors that may affect probability of crisis, we incorporate country fixed effects into the model. All of the significant lagged values of macroeconomic variables are included in the model.

[13]Descriptive statistics of all variables used in the estimations are presented in Table A.2 at the Appendix A.

2.3.3 Data

International banking flows from banks to banks and from banks to non-banks are defined as exchange rate adjusted flows in cross-border bank claims, from banks located in a particular country to another country in the sample. These flows include loans and deposits, debt securities, and other assets. Flows between any two countries correspond to either an increase or a decrease in cross-border assets of a reporting country with respect to another country. In the analysis, following Minoiu and Reyes (2013), we consider only positive flows and replace negative flows with zeros because positive flows are net investments (i.e. investments minus repayments) whereas negative flows are net repayments. We sum the exchange rate adjusted changes of the four quarters to obtain annualized cross-border flows. Those flows are expressed in terms of constant 2016 US dollars.

Cross-border flows are obtained from BIS Locational Banking Statistics (LBS). Following the balance of payments approach, LBS is collected on a residency basis. Cross-border exposures are reported based on the location (i.e. residency) of the reporting bank, regardless of their owners' nationality. In this respect, LBS covers the cross-border positions of all banks domiciled in the reporting area, including positions vis-a-vis their foreign affiliates. BIS also reports international banking statistics on a consolidated basis (CBS). CBS captures the consolidated positions of banks' worldwide offices, including the positions of banks' foreign subsidiaries and branches, but excluding inter-office activity with respect to the counterparty country. Hence, in CBS, unlike LBS, it is the nationality of the reporting bank that matters, not the residency. Similar to Minoiu and Reyes, 2013, Minoiu et al., 2015, Tonzer, 2015 and Kalemli-Ozcan et al., 2013, we use LBS, rather than CBS for the following reasons: (i) Since, LBS follows balance of payments principle, it is possible to use and to compare cross-border bank capital flows with any other type

of capital flows; (ii) LBS has a longer time coverage than CBS; (iii) LBS provides exchange rate adjusted flow data, as well as stock data whereas CBS provides only stock data. For more information regarding BIS consolidated and locational banking statistics, see McGuire and Wooldridge, 2005.

In BIS international banking statistics, bilateral cross-border balance sheet positions of all individual banks from reporting countries are aggregated by bank, but they are disaggregated by the recipient country so that we can distinguish lender and borrower countries. The source of funds is the banking sector, whereas the recipient of funds can either be the banking sector or non-banking sector. The recipients of funds are used in identifying BB and BNB networks. The banking sector is composed of deposit money banks, offices controlled by the same banking group (subsidiaries and branches), and central banks. The non-bank sector includes non-bank financial corporations such as hedge funds, securities brokers, money market funds, pension funds, insurance companies, central clearing counterparties, development banks and other financial entities, non-financial corporations, government entities, households and general government (public sector).[14] HHI is calculated by using BIS data. All of the macroeconomic variables and series used to estimate credit boom and capital inflow dummy variables are obtained from the World Bank World Development Indicators and World Bank Global Financial Development Database.

[14]Cross-border loans provided by non-bank institutions are not included in BIS dataset.

2.4. Characteristics of the BB and the BNB Lending Networks

2.4.1 Connectivity Measures

Before presenting the empirical findings about the relationship between financial connectivity and the probability of crisis, descriptive statistics of the characteristics of BB and BNB lending networks are presented in Table 2.1 for the period of 1978-2016, as well as for crisis, non-crisis, credit boom, and capital inflow periods.

The average global connectivity in BB lending network, that's the probability that any two countries in the network are connected; is 58 percent during the sample period. The average local connectivity measured by BCC; the probability that any two counterparties of a country are also counterparties of themselves; is 60 percent. The BNB network is less connected than the BB network. Those figures are 54 percent and 57 percent, respectively in the BNB network. Connectivity measured by WCC rises up to 81 percent in both networks. This reflects the intensity of cross-border lending relationships among countries. On average, the highest levels of connectivity measures are observed in non-crisis periods in both networks, whereas the lowest levels are observed in crisis periods.

2.4.2 Other Network Characteristics

In addition to connectivity measures, several characteristics of the cross-border BB and BNB lending networks are presented in Table 2.1. These measures include in- and out-degree, in- and out-strength, average-nearest-neighborhood degree (ANND), and average-nearest-neighborhood strength (ANNS).

The number of lending relationships across countries is measured by in- and

out-degree statistics. We observe that in the BB network, countries borrowed from (lent to), on average, 7.5 (7.4) countries in non-crisis periods, whereas countries reduced the number of countries that they have borrowing (lending) relationship to 5.6 (5.8) in crisis periods. Similarly, in the BNB network, countries borrowed from (lent to), on average, 6.7 (7.3) countries in non-crisis periods whereas the figure reduced to 5.8 (6.1) during crisis periods. In both networks, the highest number of lending relationships was attained in non-crisis periods.

Strength measures indicate the amount of lending relationship across countries. We observe that during the overall analysis period, average cross-border flows borrowed/lent across BB network (in- and out-strength statistics) is almost two times that of the BNB network, although there were, on average, similar number of creditors(debtors) in both networks (in- and out-degree statistics). The highest amount of average cross-border flows are observed at capital inflow periods in both networks. In particular, average cross-border flows received by the non-banking sector increased by 23.7 bn USD (from 20.6 bn USD to 44.3 bn USD) and those received by banking sector increased by 27 bn USD (from 46.5 bn USD to 73.5 bn USD) during capital inflow periods in comparison to non-crisis periods.

In the BNB network, we observe less fluctuation and lower amount of transactions. For example, countries borrowed from (lent to), on average, 21.5 bn USD (23.4 bn USD) during the overall analysis period. Those figures were 23.8 bn USD (25.8 bn USD) in crisis periods, 23.8 bn USD (20.2 bn USD) in credit booms, but increased to 44.3 bn USD (38.9 bn USD) in capital inflow periods. Cross-border flows are found to be more volatile during capital inflow periods in both networks, as observed by high standard deviations of the in- (out-) strength measures.[15] Our findings also show that in the BNB network, average cross-border flows borrowed

[15]The reason of higher volatility could be attributed to the large amount of cross-border flows to and from UK, US, France and Germany during 2005-2007 period.

from (lent to) increased from 20.6 bn USD (22.5 bn USD) in non-crisis periods to 23.8 bn USD (25.8 bn USD) in crisis periods. Similarly, in the BB lending network, average cross-border flows lent is increased from 44.1 bn USD in non-crisis periods to 51.5 bn USD in crisis periods.

The second order statistics support the previous finding that the average connectivity in both networks declined during the crisis periods. For example, in the BB network, ANND (in-in) measure suggests that debtors of a debtor country received funding from, on average, 7.4 countries in non-crisis periods, but from only 6 countries in crisis periods. Similarly, the ANND (in-out) figure suggests that debtors of a creditor country received funding from, on average, 8.1 countries in non-crisis periods and 6.6 countries in crisis periods. In the BB network, average second order cross-border flows were highest in credit boom periods, and lowest at crisis periods, whereas in the BNB lending network, the flows were highest in crisis periods. For example, in BB network, the average ANNS (in-out) indicates that debtors of a creditor country received, on average, 60 bn USD in credit boom periods, but the figure declined to 49 bn USD in crisis periods. In BNB network, this figure was 24.2 bn USD in credit boom periods and reached to 31.1 bn USD in crisis periods. These values suggest that banks may prefer non-bank borrowers to bank borrowers during crisis periods.

In addition, we examine how both networks evolve during the pre- and the post-GFC periods (see Table 2.2 for detailed analysis). According to the Figure 2.1, that illustrates the BB and BNB lending networks in the pre- and the post-GFC periods, BNB lending network seem closer to a complete network where all countries are connected with each other and denser than the BB lending network in the post-GFC. This suggests that the BNB lending network was less severely affected from the recent GFC. These differences between networks may be explained by a funding shift from bank borrowers towards non-bank borrowers

during crisis periods, as supported by the network statistics reported in Table 2.1. In particular, the non-bank sector received, on average, 23.8 bn USD cross-border flows (in-strength) in both credit boom and crisis periods, while the average cross-border flows received by the banking sector decreased from 53.4 bn USD in credit boom to 45.1 bn USD in crisis periods. Analysis of the second order cross-border flows also points out the same finding, as discussed previously.

2.4.3 Country Differences

Figure 2.2 and 2.3 show connectivity measures (BCC and WCC) and real cross-border lending flows (out-strength) of each country during the 1978-2016 period in the BB and BNB lending networks, respectively. Countries have similar characteristics. First, cross-border flows and connectivity measures in both networks decreased considerably when the GFC hit a country, but tend to increase afterwards. Second, countries experienced fluctuations in their cross-border flows and connectivity level. Third, gradual declines in the connectivity level is observed during the early 1980s and the early 1990s, corresponding to global recession periods. Finally, the BNB lending network seem to be more stable in terms of the number and the amount of lending relationships and recovered from the GFC faster than the BB lending network, because following the GFC, in BNB lending network the level of connectivity and the volume of cross-border flows across countries have reached almost to their pre-crisis levels in almost all countries. For example, cross-border flows to banking sector in France declined from 198 bn USD in 2007 to 53 bn USD in 2008; while connectivity measured by BCC reduced by 48 percentage points. On the other hand, cross-border flows to the non-banking sector in France increased from 91 bn USD in 2007 to 97 bn USD in 2008 and connectivity measured by BCC drops only 25 percentage points. We observe similar trends in Sweden, Denmark and Belgium. Similarly, cross-border flows to non-banking sector

in the US reached its pre-GFC level in 2016. However, annual flows to the banking sector were still around one-fifth of its pre-GFC level during the aftermath of GFC.

Motivated by those findings, in the next section, we examine the relationship between financial connectivity and the probability of systemic crisis, controlling for macroeconomic characteristics, and explore how this relationship changes in credit boom and capital inflow periods.

2.5. Regression Results

2.5.1 The Relationship Between Financial Connectivity and Financial Stability

Tables 2.3 and 2.4 show the results of the probit model with country fixed effects which investigates the relationship between financial connectivity and probability of crisis, controlling for macroeconomic characteristics and credit boom and capital inflow periods, respectively. In each table, Panels A and B show the results for the BB and the BNB lending networks, respectively. Columns with odd-numbers (1,3,5,7,9,11) show the estimations with contemperenous connectivity measure and dummy variable ($CreditBoom$ or $CapitalInflow$). The models estimated with one period lagged values of these variables are reported in columns with even-numbers (2,4,6,8,10,12). For macroeconomic variables, all significant lags are controlled in the models. In all of the models, the dependent variable is a crisis dummy variable.

We find that for both networks, the coefficients of connectivity measures are statistically significant and negative in contemporaneous models, regardless of the measure used for connectivity. The results imply that as financial connectivity increases, probability of crisis decreases in the countries analyzed. When we estimate the models with lagged connectivity measures and the dummy variables,

connectivity coefficient is found to be negative and significant only for BB network and with global connectivity measure, controlling for credit boom periods or capital inflow periods[16]. The findings support the theory of Allen and Gale (2000) and the empirical results of Chinazzi et al. (2013) and Tonzer (2015) who shows that in stable times increased level of financial linkages across countries improves financial stability by transferring positive spillover effects. Unlike them Minoiu et al. (2015), find a positive relationship between the probability of crisis and the level of connectivity in the previous year. The difference in findings can be explained by their definition of crisis. The authors define one year before the actual crisis year as a crisis year and exclude the subsequent four years after the crisis. They claim that countries often have limited access to international capital markets during the crisis period.[17] However, as reported in Figures 2.2 and 2.3, even though there was a decline in cross-border flows one year after the crisis, this pattern in flows was not observed for four years.

2.5.2 Credit Boom Periods

We test whether the observed negative relationship between financial connectivity and probability of crisis changes in credit boom periods by including in the model an interaction variable between connectivity measure and the dummy variable indicating credit boom periods. Table 2.5 shows the results of the probit model. In the BB network, we find statistically significant and positive coefficients of interaction variables. They imply that the negative relationship observed between the financial connectivity and the probability of crisis is mitigated (Model 1) and

[16]We re-estimate the credit boom and capital inflow models to test for endogeneity among the connectivity measure and the other regressors. The result favors absence of endogeneity. In particular, the Wald test of the exogeneity of the instrumented variables do not reject the null hypothesis of there is no endogeneity.

[17]Unlike Minoiu et al. (2015), we include the entire crisis period in our analysis. Moreover, their connectivity measure is obtained by using principal component analysis of all network characteristics, including in- and out-degree and strength measures and their second order nearest neighborhood statistics.

even completely eliminated (Models 3, 4, and 5) in credit boom periods. Hence, one may argue that an increase in financial connectivity rises the probability of crisis by facilitating negative spillover effects through increased liquidity in credit boom periods. The coefficients of interaction variables are found to be smaller when the lagged connectivity measure is used in the analysis than the case when the current level is used. It suggests that short-term effect of credit booms on the probability of crisis is more pronounced than its long-term effect in the BB lending network. The magnitude of this effect seem to change with the measure of connectivity. The coefficients of interaction variables for local connectivity measures BCC and WCC in contemporaneous models, are higher than that of FC. The highest coefficient is observed when connectivity is measured by WCC, an indicator that accounts for both the number and the amount of lending relationships that a country establishes.

Panel B of Table 2.5 shows the results for the BNB lending network. We find that an increase in the level of financial connectivity reduces the probability of crisis in contemporaneous models. The findings are similar when connectivity is measured both globally and locally. However, unlike the BB network, the coefficients of interaction variables in the BNB network are statistically insignificant in all models. Those findings indicate that credit boom periods do not significantly change the relationship between connectivity and probability of crisis in the BNB lending network. It is an expected result because cross-border flows to the non-bank sector are channelled into real economy, and may not lead to immediate destabilization. The insignificant coefficients of the credit boom dummy variable in models for the BNB lending network indicate that non-bank borrowers are less sensitive to credit booms, as we conclude by the first and the second order degree and strength statistics of this network, reported in Table 2.1. Almost all of the control variables are statistically significant and have expected signs in both networks.

2.5.3 Capital Inflow Periods

Table 2.6 presents the results of the probit model that examines how the relationship between connectivity and probability of crisis changes in capital inflow periods. In the BB lending network (panel A), a negative relationship between connectivity and the probability of crisis is observed. Coefficient of $CapitalInflow$ dummy variable is found to be positive and statistically significant only in lagged models.[18] The destabilizing impact of capital inflows is also observed by Caballero (2014). He predicts that capital inflow upsurges increase probability of crisis from 4 percent to 14 percent, using 47 crisis periods experienced in 57 countries.

The coefficients of interaction variables between connectivity measures and capital inflow dummy variable are positive and statistically significant in all models and higher than the coefficient of connectivity measures. Hence, the observed negative relationship between financial connectivity and the probability of crisis is eliminated in capital inflow periods. The combined coefficients of connectivity measures ($\beta_1 + \beta_3$) imply that an increase in the level of financial connectivity rises the probability of crisis in capital inflow periods in BB lending network.

Panel B of Table 2.6 shows the results for the BNB lending network. The coefficients of connectivity measures are found to be negative and statistically significant only in the contemporaneous models. Unlike BB network, the coefficient of capital inflow dummy variable is found to be statistically insignificant in all models. The coefficients of interaction variables are positive and significant only in contemporaneous models. The findings suggest that the negative relationship observed between financial connectivity and the probability of crisis is either mitigated (Model 7) or eliminated (Model 9 and 11) in capital inflow periods.

[18]The lagged effect of capital inflows is also found in the earlier studies. For example, Kauko (2012) shows that longer lags in capital inflows are needed to predict future difficulties.

However, this effect is limited to short-term in BNB lending market, as suggested by statistically insignificant coefficients of connectivity measures and the interaction variables in lagged models.

Table 2.7 shows the χ^2 test results of the hypothesis that the combined coefficients of connectivity ($\beta_1 + \beta_3$) in credit boom and capital inflow periods equal to zero. For both networks, almost all of the coefficients are found to be insignificant. The results suggest that in excessive liquidity periods defined by credit boom and capital inflow dummy variables, negative relationship observed between financial connectivity and the probability of crisis disappears.

Table 2.8 indicates the marginal effects of connectivity measures on the probability of crisis in normal and excessive liquidity periods. For example, it is predicted that 1 percent increase in local financial connectivity, namely WCC, in BB network will reduce the probability of crisis by 4.6 percent whereas it will have almost no effect in credit boom periods.

The results of the probit models can be summarized as follows. First, an increase in financial connectivity in BB and BNB lending networks is found to be associated with a decline in probability of crisis in developed countries. Second, this effect is found to be mitigated and/or eliminated during credit boom and capital inflow periods in both networks. Finally, financial connectivity in BB lending network affects the probability of crisis both in the short-term and in the long-term, but it does not have any statistically significant impact on the probability of crisis in BNB lending network in the long-term.

2.5.4 Robustness Tests

We did several robustness tests. As a first set of checks, we examine whether our findings are sensitive to the definition of crisis in Lo Duca et al. (2017). We

re-estimate the models by using banking crisis dates suggested by Laeven and Valencia (2013) for 11 EU countries. Laeven and Valencia (2013) define banking crisis as "when there is significant sign of financial distress in the banking system, such as significant bank runs, losses in the banking system, and/or bank liquidations, and when significant banking policy intervention measures are taken in a country in response to significant losses in the banking system." The results are found to be robust to this definition of crisis. (see Tables B.1 B.2, B.3 and B.4 in the appendix.)

Second, we use the updated banking crisis dates reported by Laeven and Valencia (2018). Compared to the crisis periods in Laeven and Valencia (2013), Laeven and Valencia (2018) suggest shorter duration for the GFC in almost all of the countries in our sample. The results are found to be robust for BNB lending network. For BB lending network, the findings are slightly different only for the lagged models. An increase in the level of financial connectivity in BB network is found to rise the probability of crisis significantly in lagged credit boom and capital inflow models, and coefficient of interaction variable is found to be statistically insignificant in credit boom models. (see Tables B.5 B.6, B.7 and B.8 in the appendix.)

As a third check for crisis, we use the alternative definition suggested by European Systemic Risk Board (Lo Duca et al., 2017). The end year of the crisis is determined based on the end of the acute phase of the crisis and does not include post-crisis adjustment period. We find that the results are robust for capital inflow models in BB and BNB lending networks, and for credit boom models in BNB lending network. For BB lending network credit boom models, although the coefficient of connectivity measure is found to be negative and statistically significant in contemporaneous models, the coefficient of interaction variable is found to be insignificant.(see Tables B.9 B.10, B.11 and B.12 in the appendix.) Different findings obtained in the BB lending network for the credit boom models

can be explained by the decline in the duration of crisis periods. In particular, Laeven and Valencia (2013, 2018) predict shorter duration to avoid labeling a non-systemic event as a systemic banking crisis. Similarly, European Systemic Risk Board predicts shorter duration of crisis by excluding post-crisis adjustment period. Policy interventions enforced by countries following the credit boom periods, as we observed in the aftermath of the recent GFC, have a potential to absorb the destabilizing impacts of credit boom on financial stability and shorten the acute phase of the crisis. These policy interventions during the credit boom periods could explain why the coefficient of interaction variable turns out to be statistically insignificant in credit boom models with alternative definitions of crisis. On the other hand, since there is no policy intervention for capital inflows such as limitations beyond certain threshold in the upsurge periods, we expect that the impact of capital inflow periods last longer and that capital inflows to have a potential to affect the probability of crisis and the relationship between financial connectivity and probability of crisis in the short-term, as well as in the long-term, irrespective of how one defines the crisis.

In addition to the alternative definition of crisis, as another robustness check, we test whether the recent GFC dominates our results by excluding the 2008-2009 period from the analysis. The results are robust to the exclusion of the recent GFC [19]. (see Tables B.13 B.14, B.15 and B.16 in the appendix.)

Besides, we test whether two countries, US and Luxembourg, dominate the findings by excluding them from the analysis. First, US is excluded from the sample because the recent GFC was initiated in the US, and its cross-border flows are larger than other countries in the sample. Second, Luxembourg is excluded because

[19] We also exclude this period from the analysis for the alternative definitions of crisis described above. We observe that capital inflow models are robust for both networks and that credit boom models are robust for BNB network. For BB network, the coefficient of interaction variable turns out to be insignificant while the coefficient of connectivity measure is significant and has expected negative sign in credit boom models.

its GDP is extremely high compared to the rest of the sample. Luxembourg is also eliminated by Martinez (2015) for having extreme values of banking flows. The results are robust to exclusion of those countries. (see Tables B.17 B.18, B.19 and B.20, B.21 B.22, B.23 and B.24 in the appendix.)

As another test, we re-define credit boom and capital inflow periods to be two standard deviation above its historical average for each year and the country and re-estimate the models. For BNB lending network, the results seem robust. For BB lending network, the results suggest that credit boom periods have no longer significant effect on the relationship between connectivity and the probability of crisis. Besides, capital inflow periods are found to have an impact on this relationship only in lagged models in both lending networks. (see Tables B.25, B.26, B.27 and B.28 in the appendix.)

In addition, we re-estimate the models by including three-way interaction variable between connectivity, credit boom and capital inflow periods to observe the simultaneous impact of credit boom and capital inflow periods on the relationship between connectivity and the probability of crisis. In both lending networks, the coefficients of three-way interaction variable are found to be statistically insignificant in all models. In BB lending network, credit boom periods are found to eliminate the positive effect of an increase in connectivity on the probability of crisis whereas capital inflow periods are found to have no effect on this relationship. In BNB lending network, both credit boom and capital inflow periods have no significant effect on the relationship between connectivity and the probability of crisis. (see Tables B.29 and B.30 in the appendix.)

Finally, the findings are found to be robust to alternative econometric specifications, namely the logit estimation, the linear probability model, and the random effects models. (see Tables B.31, B.32, B.33, B.34, B.35 and B.36)

2.6. Conclusion

Theoretical and empirical literature indicates that financial stability of the system is crucially dependent on the level of connectivity among financial institutions. Yet, how and in which direction financial connectivity affects financial stability is not clear. This paper contributes to this debate by investigating the relationship between probability of systemic crisis and connectivity during normal, credit boom, and capital inflow periods, for different borrower types (banks and non-banks), and by defining financial connectivity at global and at individual country levels. It is found that an increase in financial connectivity in BB and BNB lending networks is associated with a decline in the probability of systemic crises, controlling for macroeconomic variables and other country characteristics. However, this effect is found to be mitigated, and even completely eliminated in excessive liquidity periods represented by credit boom and capital inflow periods. In particular, while an increase in the level of connectivity in BB lending market is found to increase the probability of crisis in credit boom periods, it does not have any impact in BNB lending network. On the other hand, an increase in the level of connectivity is found to increase probability of crisis in capital inflow periods in both networks, but this effect is found to be limited to short-term in the BNB lending network.

The descriptive analysis of the characteristics of BB and BNB networks reveals the following important findings: (i) in both networks, cross-border flows and connectivity decreased considerably in the year when recent GFC hit a country; (ii) a lending shift may have occurred from banks towards non-bank sector in crisis periods; (iii) BNB lending network is more stable in terms of the number and the amount of lending relationships during the overall period and recovered from the recent GFC faster than BB lending network; and (iv) the average cross-border flows borrowed/lent across BNB lending network and flows lent across BB lending

network are higher in crisis periods than non-crisis periods.

The findings of the paper have several policy implications. First, policymakers should closely monitor cross-border flows because an increase in financial connectivity is found to have benefits, as well as risks. In particular, it is found that an increase in financial connectivity is associated with a decrease in the probability of crisis, but this effect is eliminated during excessive liquidity periods. Second, it is observed that the type of the borrower (i.e. bank or non-bank) plays an important role in maintaining financial stability benefits of an increase in financial connectivity. The results suggest that cross-border lending to banks has a higher potential to disturb financial stability compared to the non-bank sector lending, especially in credit boom periods. Hence, policy-makers should target to design a financial market mechanism that can reduce risks associated with an increase in financial connectivity, while maintaining its benefits. They may reduce risks by enforcing policies that encourage transfer of cross-border flows to the real economy rather than banking sector during excessive liquidity periods.

Future work could expand our analysis by investigating how the relationship between financial connectivity and stability changes in response to different shock sizes, as Acemoglu et al. (2015) argues. Such work is important as it highlights when financial connectivity serves to improve financial stability. Moreover, this study examines only the advanced economies in which any crisis initiated in these countries affect the rest of the world. This study could be expanded further by including bank flows to emerging economies that experience crises more frequently.

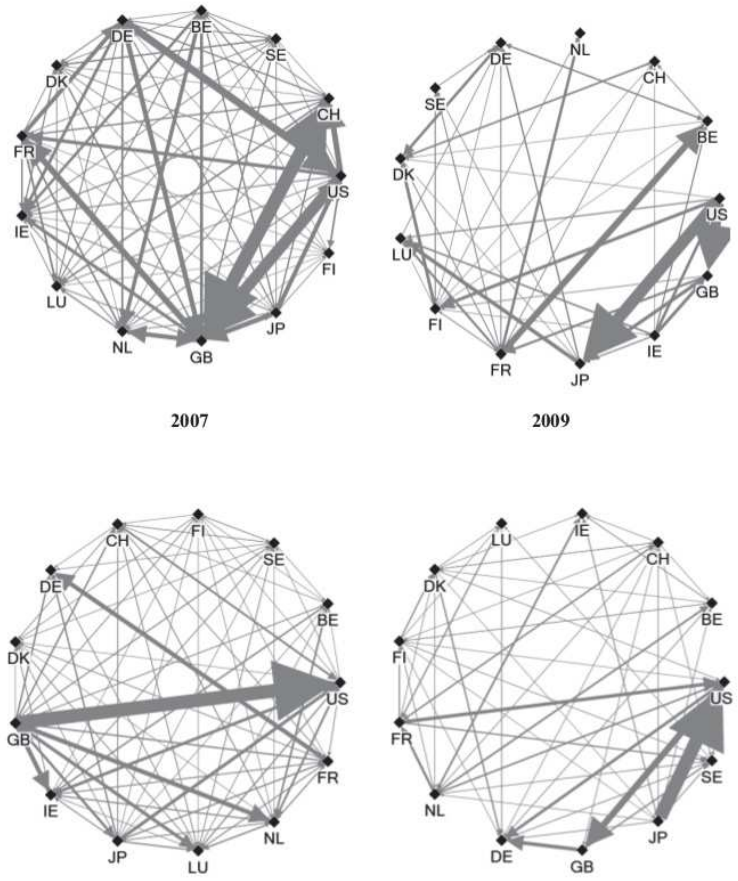

Figure 2.1: Bank-to-Bank and Bank-to-Non-Bank Lending Networks in 2007 and 2009

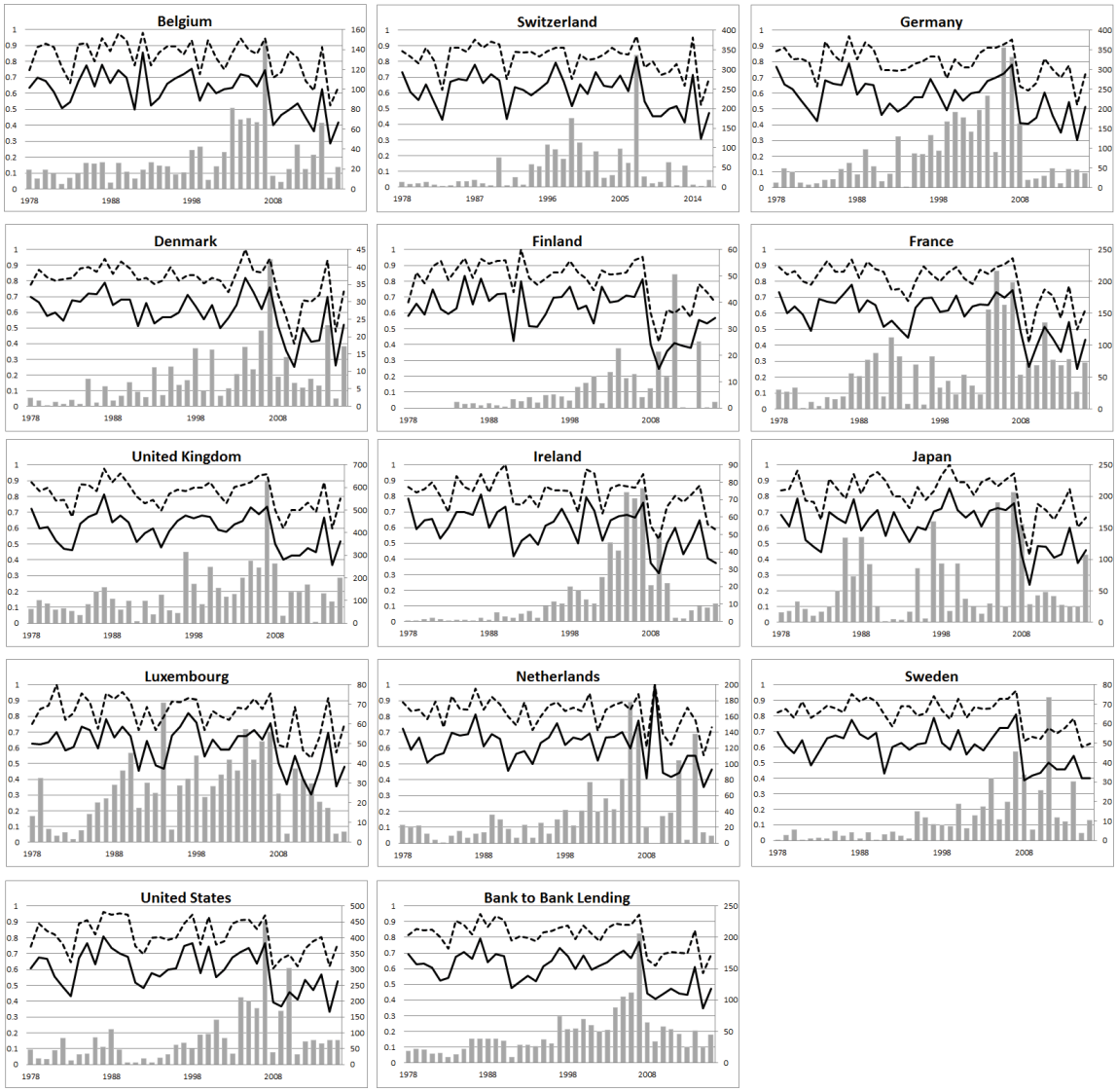

Figure 2.2: Financial Connectivity and International Bank Flows, Bank-to-Bank Lending

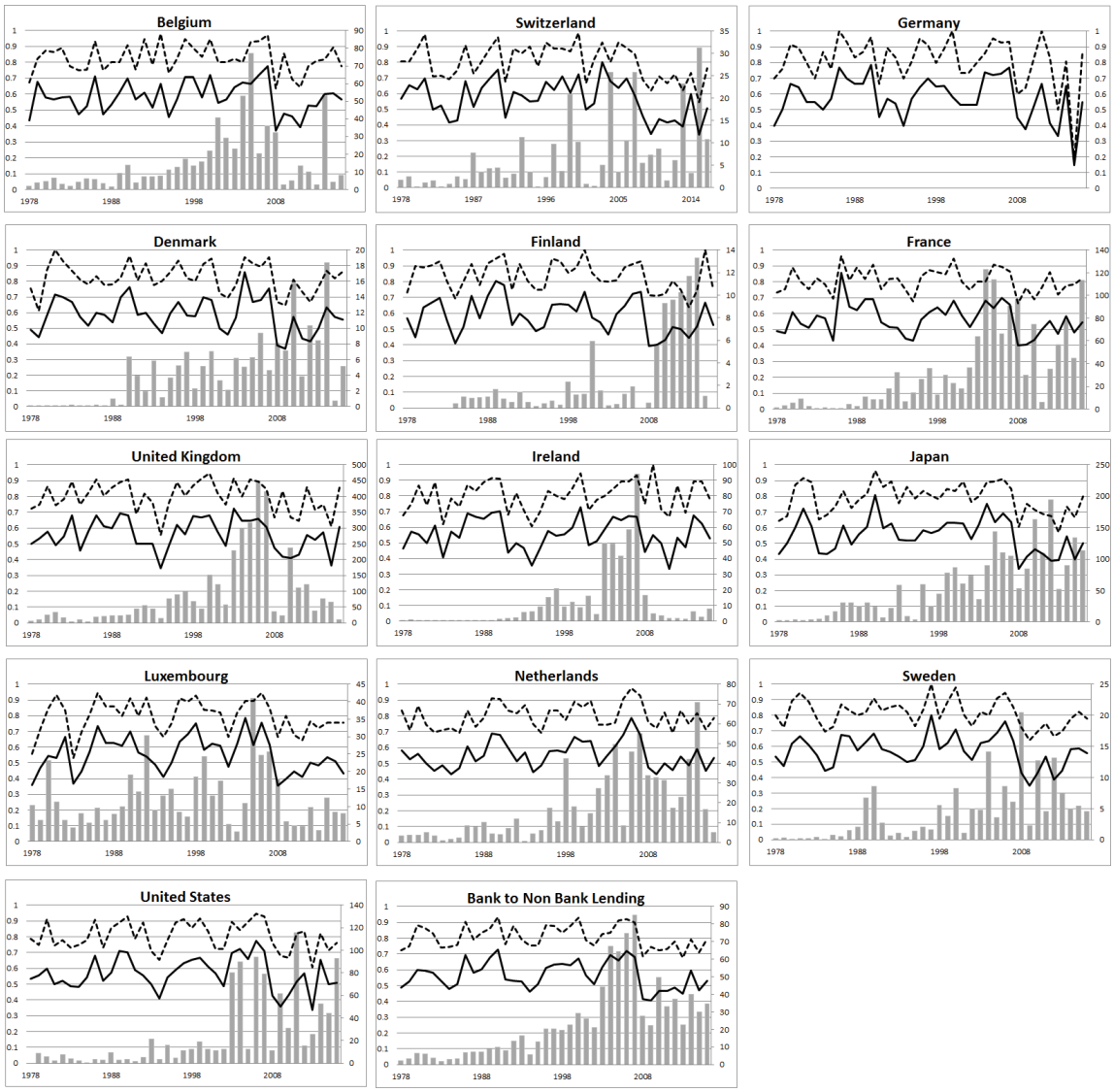

Figure 2.3: Financial Connectivity and International Bank Flows, Bank-to-Non-Bank Lending

Table 2.1: Descriptive network statistics

		Overall Period		Crisis Periods		Non-Crisis Periods		Credit Booms		Capital Inflows	
		Mean	Std Dev	Mean	Std Dev	Mean	Std Dev	Mean	Std Dev	Mean	Std Dev
Panel A: Bank-to-Bank Lending	*Connectivity Measures*										
	FC	0.58	0.11	0.56	0.12	0.62	0.07	0.61	0.11	0.56	0.10
	BCC	0.60	0.12	0.52	0.13	0.63	0.10	0.62	0.15	0.58	0.13
	WCC	0.81	0.11	0.74	0.12	0.84	0.09	0.81	0.13	0.80	0.12
	First Order Statistics										
	In-Degree	7.0	2.5	5.6	2.3	7.5	2.3	6.7	2.6	7.1	2.6
	Out-Degree	7.0	2.5	5.8	2.2	7.4	2.4	7.4	2.9	6.7	2.6
	In-Strength	46.1	70.3	45.1	82.9	46.5	64.8	53.4	60.0	73.5	136.9
	Out-Strength	46.1	66.1	51.5	79.2	44.1	60.2	52.2	76.7	71.4	114.1
	HHI	0.38	0.19	0.44	0.21	0.36	0.18	0.41	0.21	0.36	0.19
	Second Order Statistics										
	ANND (in-in)	7.0	1.5	6.0	1.5	7.4	1.2	7.1	1.9	6.9	1.5
	ANND (in-out)	7.7	1.4	6.6	1.5	8.1	1.1	7.7	1.6	7.5	1.5
	ANND (out-out)	7.0	1.4	6.0	1.4	7.4	1.3	7.2	1.6	6.9	1.6
	ANND (out-in)	7.7	1.4	6.6	1.5	8.0	1.1	7.8	1.5	7.4	1.5
	ANNS (in-in)	49.6	41.1	45.6	31.1	51.2	44.2	55.7	43.9	50.0	43.5
	ANNS (in-out)	52.3	40.7	49.0	32.5	53.6	43.3	60.0	42.3	51.2	44.3
	ANNS (out-out)	47.9	38.8	44.4	29.0	49.3	41.9	54.4	42.2	48.1	42.0
	ANNS (out-in)	51.2	41.0	50.1	30.4	51.6	44.5	58.1	49.4	52.0	47.3
Panel B: Bank-to-Non-Bank Lending	*Connectivity Measures*										
	FC	0.54	0.09	0.53	0.09	0.54	0.09	0.56	0.09	0.53	0.06
	BCC	0.57	0.11	0.51	0.11	0.59	0.10	0.57	0.11	0.58	0.11
	WCC	0.81	0.11	0.76	0.13	0.82	0.09	0.81	0.09	0.83	0.10
	First Order Statistics										
	In-Degree	6.4	2.1	5.8	2.0	6.7	2.2	6.7	2.7	6.9	2.1
	Out-Degree	7.0	2.5	6.1	2.4	7.3	2.4	7.3	2.3	6.8	2.5
	In-Strength	21.5	41.8	23.8	34.4	20.6	44.2	23.8	45.4	44.3	84.1
	Out-Strength	23.4	46.0	25.8	46.9	22.5	45.6	20.2	23.9	38.9	86.9
	HHI	0.39	0.17	0.41	0.18	0.38	0.16	0.39	0.18	0.38	0.17
	Second Order Statistics										
	ANND (in-in)	6.4	1.2	5.7	1.1	6.6	1.2	6.4	1.4	6.3	1.3
	ANND (in-out)	7.8	1.1	7.2	1.1	8.1	1.0	7.8	1.3	7.8	1.1
	ANND (out-out)	6.4	1.4	5.8	1.3	6.6	1.3	6.5	1.6	6.6	1.5
	ANND (out-in)	7.1	1.1	6.4	1.0	7.3	1.1	7.1	1.1	6.9	1.2
	ANNS (in-in)	20.6	22.2	23.2	18.0	19.6	23.6	18.5	19.8	19.8	22.1
	ANNS (in-out)	27.2	26.1	31.1	19.1	25.8	28.1	24.2	24.1	26.4	26.4
	ANNS (out-out)	22.7	23.0	24.4	16.3	22.1	25.1	22.3	22.3	24.3	25.6
	ANNS (out-in)	23.6	22.1	26.1	18.0	22.7	23.4	23.0	21.8	21.8	21.1

Table 2.2: Descriptive network statistics in selected years

		1980		2007		2009		2016	
BB Network	**Unit**	**Mean**	**Std Dev**	**Mean**	**Std Dev**	**Mean**	**Std Dev**	**Mean**	**Std Dev**
Connectivity Measures									
BCC	[0,1]	0.43	0.06	0.77	0.03	0.41	0.19	0.47	0.06
WCC	[0,1]	0.65	0.05	0.95	0.01	0.62	0.16	0.69	0.06
First Order Statistics									
In-degree	links	7.08	2.69	9.23	2.17	3.77	1.64	5.69	1.89
Out-degree	links	7.08	2.53	9.23	1.30	3.77	2.65	5.69	1.65
In-strength	USD bn	21.0	23.1	205.5	226.9	33.2	31.8	45.0	37.4
Out-strength	USD bn	21.0	23.9	205.5	185.3	33.2	45.5	45.0	56.6
Second Order Statistics									
ANND (in-in)	links	7.32	0.53	9.25	0.45	3.50	0.85	5.75	0.64
ANND (in-out)	links	7.95	0.39	9.45	0.28	6.08	1.85	6.25	0.68
ANND (out-out)	links	7.17	0.74	9.25	0.25	3.71	1.52	5.71	0.59
ANND (out-in)	links	8.08	0.50	9.72	0.33	4.75	0.72	6.35	0.59
ANNS (in-in)	USD bn	24.5	4.1	226.8	37.6	27.2	12.0	47.3	12.3
ANNS (in-out)	USD bn	25.2	6.3	224.2	36.2	46.2	25.6	50.7	19.1
ANNS (out-out)	USD bn	21.9	7.5	212.6	34.3	24.6	12.1	44.8	20.8
ANNS (out-in)	USD bn	22.6	6.1	224.2	41.8	39.0	15.4	47.5	11.4
BNB Network									
Connectivity Measures									
BCC	[0,1]	0.60	0.04	0.68	0.06	0.41	0.06	0.53	0.04
WCC	[0,1]	0.88	0.02	0.90	0.05	0.74	0.11	0.80	0.04
First Order Statistics									
In-degree	links	7.08	2.69	7.69	2.10	4.38	1.85	6.31	1.32
Out-degree	links	8.36	2.11	8.33	1.97	4.75	2.49	6.83	2.21
In-strength	USD bn	5.5	8.3	72.3	84.4	20.5	27.0	31.7	45.9
Out-strength	USD bn	6.5	9.0	85.2	115.1	22.2	26.5	34.6	46.6
Second Order Statistics									
ANND (in-in)	links	6.30	0.49	7.79	0.60	3.92	0.52	6.14	0.42
ANND (in-out)	links	8.88	0.37	8.83	0.38	6.05	0.60	7.52	0.51
ANND (out-out)	links	6.31	0.54	7.76	0.68	3.79	1.28	6.20	1.03
ANND (out-in)	links	8.06	0.25	8.30	0.60	5.28	1.01	6.59	0.32
ANNS (in-in)	USD bn	3.4	0.4	81.0	14.7	16.2	13.8	33.0	13.7
ANNS (in-out)	USD bn	7.9	1.5	97.2	26.2	24.5	10.4	40.8	15.8
ANNS (out-out)	USD bn	3.3	1.5	77.1	27.1	18.7	10.0	32.2	12.4
ANNS (out-in)	USD bn	6.3	1.5	73.2	16.4	22.8	6.9	28.4	12.4

Table 2.3: Results of the probit models controlling for credit boom periods

	Panel A: Bank-to-Bank Lending						Panel B: Bank-to-Non-Bank Lending					
	(1)	(2)	(3)	(4)	(5)	(6)	(7)	(8)	(9)	(10)	(11)	(12)
Connectivity Measure												
$Ln(FC)$	-2.262	-0.971					-2.653	-0.101				
	(0.000)	(0.044)					(0.000)	(0.199)				
$Ln(BCC)$			-1.472	-0.394					-1.458	-0.570		
			(0.000)	(0.328)					(0.002)	(0.221)		
$Ln(WCC)$					-1.783	-0.190					-2.796	-0.731
					(0.005)	(0.766)					(0.000)	(0.342)
Control Variables												
$CreditBoom$	0.483	0.330	0.457	0.364	0.421	0.357	0.428	0.263	0.429	0.241	0.464	0.259
	(0.100)	(0.249)	(0.100)	(0.201)	(0.139)	(0.212)	(0.155)	(0.366)	(0.145)	(0.407)	(0.117)	(0.371)
$Ln(GDPpercapita)_t$	5.335	5.499	5.713	5.791	5.649	5.922	5.574	5.686	5.719	5.555	5.818	5.620
	(0.000)	(0.000)	(0.000)	(0.000)	(0.000)	(0.000)	(0.000)	(0.000)	(0.000)	(0.000)	(0.000)	(0.000)
$Ln(PrivCredit/GDP)_t$	0.631	0.796	0.645	0.759	0.701	0.764	0.705	0.846	0.771	0.839	0.809	0.835
	(0.028)	(0.005)	(0.023)	(0.007)	(0.013)	(0.007)	(0.018)	(0.004)	(0.009)	(0.004)	(0.007)	(0.005)
HHI_t	1.136	1.844	1.664	1.927	1.750	1.976	1.238	2.479	1.785	2.421	1.983	2.470
	(0.056)	(0.001)	(0.003)	(0.000)	(0.001)	(0.000)	(0.073)	(0.000)	(0.006)	(0.000)	(0.001)	(0.000)
HHI_{t-1}	0.008	0.006	0.136	0.345	0.296	0.418	0.861	1.231	1.122	0.983	1.262	1.105
	(0.989)	(0.992)	(0.812)	(0.538)	(0.595)	(0.454)	(0.174)	(0.066)	(0.078)	(0.115)	(0.047)	(0.066)
HHI_{t-2}	0.065	0.178	0.119	0.324	0.248	0.411	0.684	1.362	0.897	1.156	0.813	1.232
	(0.909)	(0.751)	(0.833)	(0.558)	(0.654)	(0.452)	(0.288)	(0.034)	(0.164)	(0.071)	(0.212)	(0.051)
CAB_t	0.107	0.095	0.111	0.100	0.108	0.095	0.131	0.095	0.096	0.093	0.103	0.095
	(0.120)	(0.161)	(0.105)	(0.133)	(0.107)	(0.146)	(0.064)	(0.163)	(0.179)	(0.176)	(0.151)	(0.168)
CAB_{t-1}	-0.244	-0.256	-0.265	-0.267	-0.269	-0.267	-0.271	-0.268	-0.260	-0.262	-0.275	-0.265
	(0.000)	(0.000)	(0.000)	(0.000)	(0.000)	(0.000)	(0.000)	(0.000)	(0.000)	(0.000)	(0.000)	(0.000)
$REER_t$	0.036	0.032	0.034	0.032	0.034	0.032	0.041	0.042	0.045	0.041	0.045	0.042
	(0.005)	(0.008)	(0.007)	(0.009)	(0.007)	(0.010)	(0.001)	(0.001)	(0.001)	(0.001)	(0.001)	(0.001)
$M3/GDP_t$	-0.012	-0.015	-0.014	-0.016	-0.014	-0.017	-0.019	-0.023	-0.021	-0.022	-0.023	-0.022
	(0.052)	(0.013)	(0.021)	(0.006)	(0.015)	(0.004)	(0.001)	(0.000)	(0.000)	(0.000)	(0.000)	(0.000)
$Unemployment_t$	0.397	0.381	0.410	0.392	0.402	0.398	0.389	0.409	0.419	0.395	0.430	0.401
	(0.000)	(0.000)	(0.000)	(0.000)	(0.000)	(0.000)	(0.000)	(0.000)	(0.000)	(0.000)	(0.000)	(0.000)
Obs.	427	427	427	427	427	427	427	427	427	427	427	427
Log-likelihood	-128.4	-139.0	-133.2	-140.6	-136.2	-141.0	-124.1	-134.7	-126.2	-133.9	-124.9	-134.2

Table 2.4: Results of the probit models controlling for capital inflow periods

	Panel A: Bank-to-Bank Lending						Panel B: Bank-to-Non-Bank Lending					
	(1)	(2)	(3)	(4)	(5)	(6)	(7)	(8)	(9)	(10)	(11)	(12)
Connectivity Measure												
$Ln(FC)$	-2.264	-1.016					-2.684	-0.064				
	(0.000)	(0.035)					(0.000)	(0.516)				
$Ln(BCC)$			-1.489	-0.397					-1.476	-0.593		
			(0.000)	(0.329)					(0.001)	(0.202)		
$Ln(WCC)$					-1.834	-0.238					-2.767	-0.742
					(0.004)	(0.712)					(0.000)	(0.334)
Control Variables												
$CapitalInflow$	-0.413	0.165	-0.420	0.144	-0.389	0.137	-0.474	0.093	-0.461	0.089	-0.445	0.093
	(0.137)	(0.529)	(0.129)	(0.582)	(0.156)	(0.600)	(0.097)	(0.423)	(0.099)	(0.534)	(0.100)	(0.621)
$Ln(GDPpercapita)_t$	5.304	5.309	5.684	5.595	5.611	5.709	5.590	5.533	5.719	5.426	5.803	5.487
	(0.000)	(0.000)	(0.000)	(0.000)	(0.000)	(0.000)	(0.000)	(0.000)	(0.000)	(0.000)	(0.000)	(0.000)
$Ln(PrivCredit/GDP)_t$	0.694	0.860	0.705	0.827	0.757	0.831	0.746	0.906	0.816	0.893	0.866	0.893
	(0.014)	(0.002)	(0.012)	(0.003)	(0.006)	(0.003)	(0.010)	(0.002)	(0.005)	(0.002)	(0.003)	(0.002)
HHI_t	1.190	1.820	1.736	1.909	1.803	1.957	1.337	2.502	1.863	2.455	2.069	2.508
	(0.044)	(0.001)	(0.002)	(0.000)	(0.001)	(0.000)	(0.050)	(0.000)	(0.004)	(0.000)	(0.001)	(0.000)
HHI_{t-1}	-0.096	0.005	0.047	0.375	0.209	0.438	0.720	1.177	1.003	0.955	1.146	1.083
	(0.869)	(0.994)	(0.935)	(0.503)	(0.707)	(0.432)	(0.250)	(0.078)	(0.111)	(0.125)	(0.068)	(0.071)
HHI_{t-2}	-0.077	0.125	-0.018	0.280	0.119	0.363	0.731	1.341	0.932	1.145	0.855	1.227
	(0.893)	(0.823)	(0.974)	(0.612)	(0.829)	(0.505)	(0.255)	(0.037)	(0.149)	(0.074)	(0.189)	(0.052)
CAB_t	0.094	0.093	0.099	0.097	0.098	0.093	0.116	0.093	0.078	0.092	0.085	0.093
	(0.172)	(0.170)	(0.149)	(0.145)	(0.149)	(0.158)	(0.105)	(0.170)	(0.278)	(0.182)	(0.235)	(0.174)
CAB_{t-1}	-0.258	-0.247	-0.279	-0.260	-0.282	-0.259	-0.287	-0.263	-0.273	-0.257	-0.288	-0.261
	(0.000)	(0.000)	(0.000)	(0.000)	(0.000)	(0.000)	(0.000)	(0.000)	(0.000)	(0.000)	(0.000)	(0.000)
$REER_t$	0.038	0.031	0.036	0.031	0.036	0.030	0.044	0.041	0.047	0.041	0.047	0.041
	(0.003)	(0.012)	(0.004)	(0.012)	(0.004)	(0.013)	(0.001)	(0.002)	(0.000)	(0.001)	(0.000)	(0.001)
$M3/GDP_t$	-0.013	-0.014	-0.015	-0.016	-0.015	-0.017	-0.020	-0.023	-0.021	-0.022	-0.024	-0.022
	(0.041)	(0.016)	(0.016)	(0.007)	(0.012)	(0.004)	(0.001)	(0.000)	(0.000)	(0.000)	(0.000)	(0.000)
$Unemployment_t$	0.381	0.374	0.394	0.384	0.387	0.389	0.375	0.403	0.405	0.391	0.415	0.397
	(0.000)	(0.000)	(0.000)	(0.000)	(0.000)	(0.000)	(0.000)	(0.000)	(0.000)	(0.000)	(0.000)	(0.000)
Obs.	427	427	427	427	427	427	427	427	427	427	427	427
Log-likelihood	-128.6	-139.5	-133.3	-141.2	-136.3	-141.7	-123.7	-135.0	-125.9	-134.2	-124.8	-134.6

Table 2.5: Results of probit models with interaction variable between credit boom periods and connectivity measures

	Panel A: Bank-to-Bank Lending						Panel B: Bank-to-Non-Bank Lending					
	(1)	(2)	(3)	(4)	(5)	(6)	(7)	(8)	(9)	(10)	(11)	(12)
Connectivity Measure												
$Ln(FC)$	-2.709	-1.173					-2.903	-0.125				
	(0.000)	(0.029)					(0.000)	(0.846)				
$Ln(BCC)$			-2.091	-0.771					-1.518	-0.664		
			(0.000)	(0.097)					(0.002)	(0.173)		
$Ln(WCC)$					-2.610	-0.568					-2.626	-0.677
					(0.001)	(0.436)					(0.001)	(0.399)
Interaction Variables												
$Ln(FC) * CreditBoom$	1.875	0.838					1.629	0.780				
	(0.054)	(0.380)					(0.247)	(0.547)				
$Ln(BCC) * CreditBoom$			2.263	1.676					0.595	0.840		
			(0.010)	(0.089)					(0.652)	(0.492)		
$Ln(WCC) * CreditBoom$					2.963	1.676					-2.219	-0.551
					(0.031)	(0.270)					(0.451)	(0.817)
Control Variables												
$CreditBoom$	1.590	0.804	1.769	1.225	1.183	0.726	1.524	0.776	0.805	0.747	-0.059	0.140
	(0.013)	(0.188)	(0.002)	(0.032)	(0.008)	(0.093)	(0.124)	(0.389)	(0.361)	(0.346)	(0.938)	(0.813)
$Ln(GDPpercapita)_t$	5.337	5.464	5.678	5.746	5.659	5.907	5.659	5.725	5.740	5.619	5.826	5.606
	(0.000)	(0.000)	(0.000)	(0.000)	(0.000)	(0.000)	(0.000)	(0.000)	(0.000)	(0.000)	(0.000)	(0.000)
$Ln(PrivCredit/GDP)_t$	0.632	0.791	0.654	0.738	0.703	0.746	0.695	0.832	0.770	0.819	0.806	0.842
	(0.029)	(0.005)	(0.023)	(0.009)	(0.013)	(0.008)	(0.020)	(0.004)	0.010)	(0.006)	(0.007)	(0.005)
HHI_t	1.182	1.814	1.676	1.947	1.790	1.965	1.300	2.457	1.823	2.412	1.927	2.476
	(0.047)	(0.001)	(0.003)	(0.000)	(0.001)	(0.000)	(0.063)	(0.000)	(0.005)	(0.000)	(0.002)	(0.000)
HHI_{t-1}	-0.017	0.011	0.023	0.309	0.241	0.415	0.915	1.228	1.139	1.012	1.256	1.097
	(0.977)	(0.985)	(0.969)	(0.587)	(0.670)	(0.459)	(0.152)	(0.067)	(0.074)	(0.106)	(0.048)	(0.069)
HHI_{t-2}	0.077	0.183	0.138	0.288	0.287	0.400	0.708	1.370	0.905	1.161	0.799	1.234
	(0.893)	(0.745)	(0.809)	(0.606)	(0.609)	(0.466)	(0.273)	(0.033)	(0.161)	(0.070)	(0.221)	(0.051)
CAB_t	0.109	0.098	0.112	0.100	0.109	0.095	0.136	0.096	0.097	0.094	0.099	0.094
	(0.114)	(0.152)	(0.106)	(0.136)	(0.110)	(0.149)	(0.058)	(0.158)	(0.175)	(0.171)	(0.165)	(0.169)
CAB_{t-1}	-0.242	-0.256	-0.265	-0.265	-0.269	-0.265	-0.275	-0.268	-0.261	-0.262	-0.273	-0.266
	(0.000)	(0.000)	(0.000)	(0.000)	(0.000)	(0.000)	(0.000)	(0.000)	(0.000)	(0.000)	(0.000)	(0.000)
$REER_t$	0.038	0.032	0.036	0.032	0.036	0.032	0.043	0.042	0.045	0.041	0.044	0.042
	(0.003)	(0.008)	(0.004)	(0.010)	(0.004)	(0.010)	(0.001)	(0.001)	(0.001)	(0.001)	(0.001)	(0.001)
$M3/GDP_t$	-0.012	-0.014	-0.014	-0.015	-0.015	-0.016	-0.020	-0.023	-0.021	-0.022	-0.023	-0.023
	(0.046)	(0.017)	(0.014)	(0.013)	(0.011)	(0.006)	(0.001)	(0.000)	(0.000)	(0.000)	(0.000)	(0.000)
$Unemployment_t$	0.398	0.377	0.415	0.391	0.408	0.398	0.391	0.410	0.420	0.397	0.432	0.401
	(0.000)	(0.000)	(0.000)	(0.000)	(0.000)	(0.000)	(0.000)	(0.000)	(0.000)	(0.000)	(0.000)	(0.000)
Obs.	427	427	427	427	427	427	427	427	427	427	427	427
Log-likelihood	-126.6	-138.6	-129.7	-139.0	-133.7	-140.4	-123.4	-134.5	-126.1	-133.7	-124.6	-134.2

Table 2.6: Results of probit models with interaction variable between capital inflow periods and connectivity measures

	Panel A: Bank-to-Bank Lending						Panel B: Bank-to-Non-Bank Lending					
	(1)	(2)	(3)	(4)	(5)	(6)	(7)	(8)	(9)	(10)	(11)	(12)
Connectivity Measure												
$Ln(FC)$	-2.845	-1.224					-2.918	-0.209				
	(0.000)	(0.014)					(0.000)	(0.736)				
$Ln(BCC)$			-1.695	-0.566					-1.712	-0.672		
			(0.000)	(0.078)					(0.000)	(0.155)		
$Ln(WCC)$					-2.159	-0.527					-3.243	-0.979
					(0.001)	(0.430)					(0.000)	(0.223)
Interaction Variables												
$Ln(FC) * CapitalInflow$	3.063	1.908					2.281	1.120				
	(0.001)	(0.032)					(0.022)	(0.219)				
$Ln(BCC) * CapitalInflow$			1.912	1.544					2.253	0.949		
			(0.024)	(0.063)					(0.014)	(0.298)		
$Ln(WCC) * CapitalInflow$					3.531	3.280					3.392	1.982
					(0.023)	(0.036)					(0.067)	(0.282)
Control Variables												
$CapitalInflow$	1.185	1.064	0.498	0.840	0.262	0.700	0.858	0.671	0.696	0.522	0.170	0.411
	(0.033)	(0.034)	(0.323)	(0.069)	(0.516)	(0.065)	(0.185)	(0.217)	(0.205)	(0.293)	(0.698)	(0.299)
$Ln(GDPpercapita)_t$	5.405	5.345	5.727	5.611	5.655	5.778	5.674	5.523	5.975	5.450	5.996	5.510
	(0.000)	(0.000)	(0.000)	(0.000)	(0.000)	(0.000)	(0.000)	(0.000)	(0.000)	(0.000)	(0.000)	(0.000)
$Ln(PrivCredit/GDP)_t$	0.701	0.787	0.685	0.804	0.757	0.802	0.726	0.871	0.797	0.885	0.823	0.891
	(0.015)	(0.006)	(0.015)	(0.004)	(0.007)	(0.005)	(0.013)	(0.003)	(0.006)	(0.002)	(0.005)	(0.002)
HHI_t	1.133	1.820	1.728	1.901	1.831	1.958	1.319	2.374	1.822	2.381	2.050	2.453
	(0.064)	(0.001)	(0.002)	(0.000)	(0.001)	(0.000)	(0.061)	(0.000)	(0.006)	(0.000)	(0.001)	(0.000)
HHI_{t-1}	-0.118	0.018	-0.001	0.413	0.143	0.527	0.844	1.093	1.135	0.897	1.211	1.040
	(0.839)	(0.976)	(0.999)	(0.468)	(0.796)	(0.356)	(0.182)	(0.108)	(0.076)	(0.155)	(0.056)	(0.086)
HHI_{t-2}	-0.059	0.007	0.003	0.166	0.127	0.254	0.774	1.309	0.997	1.122	0.906	1.185
	(0.919)	(0.990)	(0.995)	(0.766)	(0.819)	(0.645)	(0.231)	(0.042)	(0.126)	(0.081)	(0.166)	(0.062)
CAB_t	0.138	0.103	0.115	0.104	0.112	0.094	0.143	0.099	0.116	0.101	0.110	0.101
	(0.059)	(0.128)	(0.100)	(0.121)	(0.103)	(0.154)	(0.054)	(0.144)	(0.128)	(0.144)	(0.141)	(0.140)
CAB_{t-1}	-0.312	-0.260	-0.301	-0.268	-0.298	-0.263	-0.323	-0.270	-0.317	-0.267	-0.314	-0.269
	(0.000)	(0.000)	(0.000)	(0.000)	(0.000)	(0.000)	(0.000)	(0.000)	(0.000)	(0.000)	(0.000)	(0.000)
$REER_t$	0.047	0.034	0.043	0.033	0.040	0.031	0.049	0.042	0.054	0.042	0.052	0.042
	(0.000)	(0.007)	(0.001)	(0.008)	(0.001)	(0.013)	(0.000)	(0.002)	(0.000)	(0.001)	(0.000)	(0.001)
$M3/GDP_t$	-0.014	-0.015	-0.015	-0.017	-0.016	-0.017	-0.021	-0.023	-0.022	-0.022	-0.024	-0.022
	(0.022)	(0.011)	(0.013)	(0.005)	(0.009)	(0.004)	(0.001)	(0.000)	(0.000)	(0.000)	(0.000)	(0.000)
$Unemployment_t$	0.403	0.376	0.401	0.386	0.400	0.396	0.391	0.402	0.425	0.392	0.426	0.398
	(0.000)	(0.000)	(0.000)	(0.000)	(0.000)	(0.000)	(0.000)	(0.000)	(0.000)	(0.000)	(0.000)	(0.000)
Obs.	427	427	427	427	427	427	427	427	427	427	427	427
Log-likelihood	-122.3	-137.1	-130.8	-139.5	-133.8	-139.5	-120.8	-134.3	-122.8	-133.7	-123.2	-134.0

Table 2.7: Hypothesis testing

		FC		BCC		WCC	
		t	$(t-1)$	t	$(t-1)$	t	$(t-1)$
Panel A (Credit Boom Model)	**Bank-to-Bank Lending**						
	$\beta_1 + \beta_3$	-0.834	-0.335	0.172	0.905	0.353	1.108
	$\chi^2 statistics$	0.92	0.15	0.05	1.01	0.09	0.64
	$p - value$	0.34	0.70	0.82	0.31	0.77	0.42
	Bank-to-Non-Bank Lending						
	$\beta_1 + \beta_3$	-1.274	0.655	-0.924	0.176	-4.845	-1.228
	$\chi^2 statistics$	0.93	0.28	0.53	0.02	2.89	0.29
	$p - value$	0.34	0.60	0.47	0.88	0.09	0.59
Panel B (Capital Inflow Model)	**Bank-to-Bank Lending**						
	$\beta_1 + \beta_3$	0.218	0.684	0.218	0.978	1.372	2.753
	$\chi^2 statistics$	0.06	0.55	0.07	1.38	0.83	3.12
	$p - value$	0.80	0.46	0.79	0.24	0.36	0.08
	Bank-to-Non-Bank Lending						
	$\beta_1 + \beta_3$	-0.636	0.911	0.541	0.277	0.149	1.003
	$\chi^2 statistics$	0.35	0.84	0.34	0.09	0.01	0.31
	$p - value$	0.55	0.36	0.56	0.77	0.93	0.58

Table 2.8: Marginal effects

	Panel A Credit Boom Model		**Panel B Capital Inflow Model**	
	Non-Boom	Credit Boom	Non-Inflow	Capital Inflow
Bank-to-Bank Lending				
$Ln(FC_t)$	-0.048	-0.011	-0.051	0.005
$Ln(BCC_t)$	-0.029	0.002	-0.033	0.003
$Ln(WCC_t)$	-0.046	0.001	-0.048	0.014
Bank-to-Non-Bank Lending				
$Ln(FC_t)$	-0.034	-0.007	-0.048	-0.005
$Ln(BCC_t)$	-0.021	-0.004	-0.023	0.009
$Ln(WCC_t)$	-0.032	-0.010	-0.051	0.001

CHAPTER III

DID EU(Z) AFFECT THE ROLE OF CONNECTIVITY ON FINANCIAL STABILITY?

3.1. Introduction

"Europe's Economic and Monetary Union (EMU) today is like a house that was built over decades but only partially finished. When the storm hit, its walls and roof had to be stabilized quickly. The financial system must be able to diversify risk across countries, so it can moderate the impact of country-specific shocks and lower the amount of risk that needs to be shared" (Five Presidents Report, European Commission, June 2015)

After the establishment of the European Union (EU) in 1958, the introduction of a single currency, Euro, in 1999 was an important step towards the financial integration of the member countries. EU membership ensures legislative-regulatory integration of member states while Eurozone (EUZ) membership ensures currency integration. In this chapter, we show that while using the single currency helps to improve the resiliency of EU in response to crisis in both networks, legislative-regulatory integration across member states without eliminating currency risk seem to undermine the resiliency of the EU financial system for

bank-to-bank lending network.

EU and EUZ memberships boosted cross-border flows across European countries. After the introduction of the Euro, the real cross-border flows in bank-to-bank cross-border lending market increased by four times, from 330 billion USD in 1999 to 1273 billion USD in 2007 and the average level of connectivity reaches its highest level by 2007, as shown in Figure 3.1.

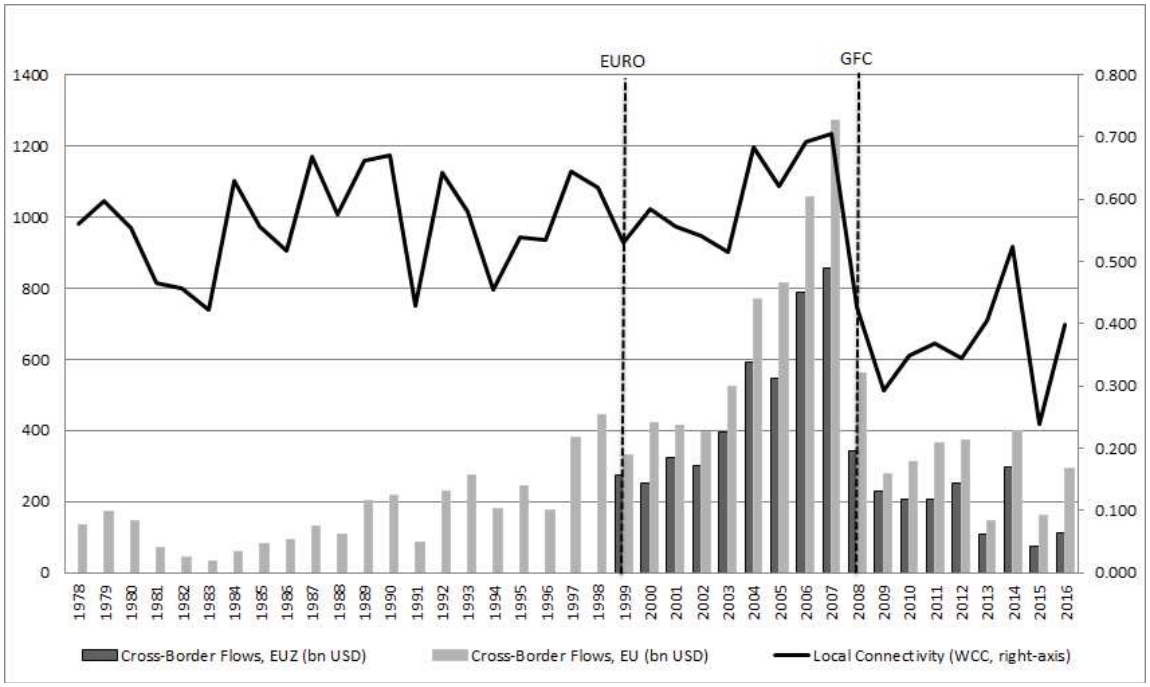

Figure 3.1: Real Cross-Border Flows and Average Local Connectivity for EU Bank-to-Bank Lending Market, 1978-2016

Source: Authors' calculations using BIS data. Flows are in terms of constant 2016 USD dollars.

Several studies in the literature document that not only cross-border lending flows but also trading books, equity and banking assets increased when EU member countries started to use the same currency. For example, Lane (2006) examines bilateral bond holdings across EU and EUZ members based on IMF's Coordinated Portfolio Investment Survey (CPIS) and finds a bias in favor of Euro area countries. In particular, the author shows that monetary union disproportionately

increased cross-border bond holdings across members relative to the cross-border bond holdings of the members with respect to the rest of the world. Similarly, based on IMF CPIS and BIS cross-border bank assets data for 19 source countries with respect to the rest of the world, Coeurdacier and Martin (2009) find that the Euro has increased trade in bonds, equity and banking assets for member countries due to the lower transaction costs. Lane and Milesi-Ferretti (2008) and De Santis and Gérard (2006) examine determinants of bilateral international equity and bond portfolio investments across 67 creditor countries during 1997-2001 period based on IMF CPIS dataset and find that euro has increased international equity investment among members by almost 150 percent by facilitating the access to the equity and bond markets. By using consolidated BIS data on total cross-border claims for 16 creditor countries and 16 debtor countries, including non-EUZ members, as well, Spiegel (2009a) and Spiegel (2009b) examine the impact of monetary union on commercial bank lending for the 1985-2006 period. The author finds evidence that monetary union has increased financial linkages across members. In particular, it is found that cross-border bank lending increased almost three-fold in Portugal and Greece following the switch to the same currency. Blank and Buch (2007) use BIS cross-border exposure data for pre-Euro period (1995–1998) as well as the post-Euro period (1999–2005) to answer the question of whether the introduction of euro boosted financial integration in EU. The dataset includes exposures of 10 reporting countries with respect to the recipient countries. By estimating gravity regressions, the authors show that there is a positive and significant impact of the Euro on bilateral financial linkages. Similar to ours, by using BIS locational banking statistics for 23 source and 165 recipient countries during the 1995-2008 period Sander et al. (2013) show that monetary union membership increases cross-border loans by 49 percent. Kalemli-Ozcan et al. (2010) go one step further and show that introduction of the Euro boosted cross-border flows across EU by

eliminating currency risk. Although all of those studies show that there is an increase in cross-border flows with Euro, none of them examines how the increase in flows affects financial stability in the country. This chapter tries to answer this question.

Increased financial linkages across members after the introduction of the Euro has both benefits and risks as discussed in Chapter 2. In particular, Allen and Gale (2000) theoretically show that an increase in financial connectivity improves resilience to financial crisis in an integrated economy without frictions in financial markets, as risk is diversified among many counterparties. However, depending on the structure of the market, an increase in financial connectivity could deteriorate financial stability, as empirically shown by Chinazzi et al. (2013); Cihak et al. (2012); Minoiu et al. (2015); Tonzer (2015); and Sensoy et al. (2018).

Motivated by the previous literature, in this study, by using network analysis to model lending relationships across countries, we examine the relationship between financial connectivity and the probability of crisis in EU countries and try to answer the following research questions for both bank-to-bank and bank-to-non-bank EU cross-border lending markets : (i) Did legislative-regulatory integration of member states through EU membership enhance the positive effect of financial connectivity on financial stability, as documented by the theoretical literature? (ii) Did the elimination of currency risk through single currency, Euro, contribute to financial stability benefits of connectivity? (iii) Did being an EU and EUZ member change these benefits during the pre-crisis period of 2004-2007 in which cross-border exposures rise rapidly and uninterruptedly? Allen et al. (2011) argue that the stability benefits from cross-border banking outweigh the costs, as long as cross-border banking does not become excessive. We contribute to the relevant literature by providing empirical evidence regarding not only for BB, but also for BNB lending market, because non-banking sector lending may have

different patterns, as documented in Chapter 2 for cross-border lending across core countries. In particular, in the previous chapter we show that BNB lending market is not as sensitive as BB lending market to credit booms. This may be due to the fact that funds to the non-banking sector is transferred directly to the real economy and does not contribute to the money creation process which further boosts the financial system. We also relate the previous empirical literature's findings on the increase in cross-border flows, as a result of the single currency usage, with the probability of crisis and show that further integration through EUZ helps to improve the resilience of EU in response to crisis, yet during the excessive lending periods, an increase in connectivity is found to raise the probability of crisis for in both lending networks, regardless of the membership status

3.2. Legislative-Regulatory Harmonization of EU Financial Markets

The establishment of EU in 1958 has come with many challenges. One of the major challenges was to complete the monetary and financial integration of the member states. In 1999, the single currency, Euro is introduced. In order to adopt the Euro, EU countries have to meet relevant EU law and specific conditions to ensure economic convergence. These requirements, agreed by the EU Member States in Maastricht in 1991, are known as the Maastricht convergence criteria. They aim to set standards for countries in terms of price stability, sound public finances, exchange-rate stability and long-term interest rates. Table 3.1 summarizes the four convergence criteria need to be met by countries to join the EUZ.

"According to the Maastricht Treaty, at least once every two years, or at the request of a Member State with a derogation, the Commission and the European

Table 3.1: The four convergence criteria

What is measured:	Price stability	Sound and sustainable public finances	Durability of convergence	Exchange rate stability
How it is measured:	Harmonised consumer price inflation	Government deficit and debt	Long-term interest rate	Exchange rate developments in ERM II
Convergence criteria:	A price performance that is sustainable and average inflation not more than 1.5 percentage points above the rate of the three best performing Member States	Not under excessive deficit procedure at the time of examination	Not more than 2 percentage points above the rate of the three best performing Member States in terms of price stability	Participation in ERM II for at least 2 years without severe tensions, in particular without devaluing against the euro

Source: European Commission. "The Exchange Rate Mechanism (ERM II) was set up on 1 January 1999 as a successor to ERM to ensure that exchange rate fluctuations between the euro and other EU currencies do not disrupt economic stability within the single market, and to help non euro-area countries prepare themselves for participation in the euro area. The convergence criterion on exchange rate stability requires participation in ERM II." (European Commission)

Central Bank assess the progress made by the euro-area candidate countries and publish their conclusions in respective convergence reports" (*European Commission*).

Following the financial globalization wave after the mid-1990s that is composed of significant foreign direct investment in terms of bank expansion across borders and the introduction of the Euro in 1999, cross-border flows boosted and European banks began to play central role in international financial markets. Not only cross-border lending, but also the level of financial integration within Europe increased immediately. For example, the introduction of the Single Banking License in 1989 through the Second Banking Directive ensured a convergence in financial legislation and regulation across member countries and the introduction of the euro in 1999 eliminated currency risk and provided a further financial integration. During the cross-border expansion, western European countries

became both home and host for large cross-border banks, while central and eastern Europe countries have been host of those banks. During this process EU has underwent series of structural reforms that transformed European financial market. The aim of those reforms has been to complete the financial integration process, maintain financial stability and reduce the effects of adverse shocks for member states. Those reforms are known as Financial Services Action Plan (FSAP).[1]

FSAP anticipated a 5-year program, which is initiated in 1998, for member states to adopt the regulations into their national economies. The official end of the program was 2003. As of today, EU legislative bodies passed most of the planned directives. In addition to FSAP, a series of technical reforms has come into existence with the introduction of single currency. For example, electronic payment and settlement systems adopted by members have allowed real-time transfer of payments across credit-institutions within EU region and with a constant fee.

However, as a result of those developments, a new challenge has emerged which is a spillover risk across members. Integrated economies have a potential to spread the effects of an adverse shock from a member state to another member state in a short period of time, so as to give way to a systemic risk. The recent GFC has shown that EU financial integration may have negative consequences on financial stability as well as benefits. For example, Giannetti and Laeven (2012) show that global banks has a potential to exacerbate the effect of home country shocks on foreign countries. Following the recent GFC, cross-border exposures declined rapidly in Europe. This reveals the fact that reforms enforced to further integrate EU financial market are inadequate in ensuring the financial stability. To overcome those challenges, Allen et al. (2011) suggest following policy recommendations for cross-border banks at national, EU and global level.

[1]For details of the FSAP directives, see Kalemli-Ozcan et al. (2010).

Table 3.2: Policy recommendations for cross-border banks

	Macro-prudential	**Monetary and Fiscal**	**Resolution framework**
National	1. Applying macroprudential tools to prevent bubbles	5. Eliminate tax deductibility of debt	8. Compatible bank resolution regimes, including contingent capital
EU	2. Monitoring the national application of macro-prudential tools, exposure to cross-border banks and overall exposures of EU banking system	6. Bankruptcy regime for countries	9. European-level deposit insurance fund and resolution framework
Global	3. Risk weights for sovereign debt 4. Mark-to-market rules to avoid mispricing of assets	7. Standing foreign exchange swap facilities	10. Resolution framework on bank group level with ex ante burden-sharing agreements

Source: Allen et al. (2011)

As suggested by policy-makers, The European Systemic Risk Board (ESRB) was established in 2010 to monitor the financial system of the EU, to prevent and mitigate systemic risk. Today, one of the major questions that needs to be addressed by EU legislative authorities is that whether further integration of EU member states could lead to greater systemic risk and whether benefits of integration outweighs its costs.

3.3. Data and Methodology

We use Bank for International Settlements (BIS) Locational Banking Statistics dataset for 25 European countries. We analyzed more than 90% of all cross-border lending within EU as the sample does not include Spain, Italy and Austria that have not allowed BIS to disclose their cross-border activities.

The BIS LBS dataset provides aggregated exchange rate adjusted cross-border flows from banks located in one country to banks or non-banks located in another country in each quarter during the 1978-2016 period. Following Minoiu and Reyes (2013), we consider only positive flows and replace negative flows with zeros because positive flows are net investments (i.e. investments minus repayments) whereas negative flows are net repayments. We sum the exchange rate adjusted changes of the four quarters to obtain annualized cross-border flows. Those flows are expressed in terms of constant 2016 US dollars. The dataset presents positions of all individual banks aggregated by banks located in a country, but disaggregated by the recipient country.

BIS LBS database is composed of reporting and non-reporting countries. Reporting countries are advanced economies that report their claims and liabilities with respect to the rest of the world to the BIS without interruption since 1978. However, non-reporting emerging countries are supposed to report data when their economy reach to a substantial size. Hence, following Minoiu et al. (2015), we use liabilities of reporting countries (Belgium, France, Denmark, Germany, Luxembourg, Finland, Netherlands, Sweden, Ireland, UK) to infer the assets of the non-reporting countries (Greece, Portugal, Cyprus, Czech Rep. Estonia, Hungary, Latvia, Lithuania, Malta, Poland, Slovakia, Slovenia, Bulgaria, Romania, Croatia).

EU(Z) membership dates of the countries in the sample differ. This enables us to assess the impacts of EU(Z) membership with respect to the non-membership status during 1978-2016 period. EU(Z) membership years of the countries are depicted in the Table 3.3.

Following Minoiu and Reyes (2013), Minoiu et al. (2015), and Bongini et al. (2018) we model each year as a separate weighted and directed network where nodes represent the countries, directed edges represent the cross-border lending

relationship across countries and weights represent the intensity of cross-border exposures.

In a frictionless market, as Allen and Gale (2000) suggest, the higher the level of financial connectivity across agents, the higher the resiliency of the financial system. Therefore, to test whether higher level of connectivity reduces the probability of crisis in European cross-border lending market, we formulate our first hypothesis. Second, we test whether EU(Z) membership affects the relationship between financial stability and connectivity, as legislative-regulatory harmonization of European countries and single currency usage is expected to increase connectivity across members by facilitating cross-border lending, meanwhile they may also facilitate the spillover of distress across members and disturb financial stability. The previous empirical literature shows that legislative-regulatory harmonization and single currency usage has boosted cross-border flows across EU. Yet, Allen et al. (2011) argue that whenever cross-border banking becomes excessive the stability benefits from cross-border banking could not outweigh its costs. Hence, we formulate our third hypothesis to test whether the effect of EU(Z) membership on the relationship between financial connectivity and stability change in the period of 2004-2007, which is associated with a rapid and continuous increase in cross-border banking flows across EU, before the GFC.

H1: Probability of crisis decreases as financial connectivity increases, controlling for macroeconomic and country characteristics.

H2: EU(Z) membership affects the relationship between financial stability and connectivity.

H3: This effect changes during the pre-crisis period of 2004-2007 which is characterized by excessive cross-border lending and the direction and the magnitude of the effect depends on the membership status, that's EU or EUZ.

Our baseline specification is the following probit model with country-fixed effects:

$$P(crisis_{it} = 1) = \Phi(C_{it-1}, \delta_{it-1})$$

The dependent variable is a financial stability indicator that takes a value of 1 if there is a crisis in country i in year t, and 0 otherwise. C_{it-1} represents the financial connectivity measure. δ_{it-1} indicates a vector of macroeconomic control variables. The control variables are macroeconomic indicators that are widely used in the literature to examine the probability of crisis (see for example, Demirguc-Kunt and Detragiache, 1998; Demirgüç-Kunt and Detragiache, 2005; Minoiu et al., 2015). They include real per capita GDP, real effective exchange rate, private credit-to-GDP ratio, current account balance-to-GDP ratio, M3 money-to-GDP ratio, unemployment rate and the Herfindahl-Hirschman index of cross-border flows of a country. All of the significant lagged values of macroeconomic variables and country fixed effects are included in the model. The lagged values of connectivity measures are used in the models to eliminate possible endogeneity.[2].

We modify the baseline model by including dummy variables for EU and EUZ membership, EU_{it} and EUZ_{it} taking value of 1 if country i holds a EU(Z) membership status at time t, and 0 otherwise. We also include two-way interaction variable with connectivity measure and $EU(EUZ)$ dummy variables in order to test whether the effect of connectivity on probability of crisis changes with membership status. A two-way interaction with connectivity and $PreGFC$ and three-way interaction with connectivity, $EU(EUZ)$ and a $PreGFC$ variable that takes a value of 1 in the build-up period of cross-border exposures during 2004-2007 are included in the model to examine whether the observed relationship

[2]We re-estimate the baseline models to test for endogeneity among the connectivity measure and the other regressors. The result favors absence of endogeneity. In particular, the Wald test of the exogeneity of the instrumented variables do not reject the null hypothesis of there is no endogeneity.

changes in the excessive lending period before the GFC. Cross-border lending flows across EU members increased incessantly during 1999-2007 period, as suggested by Figure 3.1 and as documented by the related literature. Yet, we restricted pre-crisis period to be 4 years before the GFC in order to observe how full financial integration among EU countries, which is officially ended in 2003 , affect cross-border activities across member states. Another reason is that we try to keep the number of countries in the union same during the pre-crisis period, as new members may affect the cross-border flows. During 2004-2007 period, EU and EUZ did not encounter an enlargement process that may affect the result of the analysis.

We use the crisis dates suggested by the European Systemic Risk Board (Lo Duca et al. (2017)). The study proposes systemic crisis dates satisfying several criteria, as well as residual event dates for each country. Residual events are described as events either pointed out by national authorities of the related country as stress events or identified using the financial stress index approach, but do not satisfy the criteria for systemic crises. We include both systemic crisis and residual event dates in our dataset to fully capture the resilience of the financial sector under stress. Regarding the end date of the crisis, the study proposes two approaches; end of crisis management date or system back to normal date. To become more conservative, we adopt the latter approach, as it includes acute phase of the crisis as well as post-crisis adjustment period.[3]

[3]Lo Duca et al. (2017) specify the systemic crisis dates for the European countries as follows: Belgium (1990-1993; 2008-2016), Germany (1980-1982; 1992-1994; 2001-2004; 2007-2016), Denmark (1978-1981; 1987-1994; 2008-2013), Finland (1978; 1991-1998; 2001; 2009-2016), France (1981-1983; 1991-1999; 2002-2003; 2008-2016), United Kingdom (1979-1981; 1991-1994; 2007-2016), Ireland (2008-2016), Luxembourg (2008-2016), Netherlands (1980-1984; 2002-2004; 2008-2016), Sweden (1980-1983; 1991-1997; 2000-2001; 2008-2016), Bulgaria (1996-1997; 2008-2010), Cyprus (2000-2001; 2011-2016), Czech Republic (1997-1998; 2007-2010), Estonia (1993-1995; 1998-1999; 2009-2010), Greece (1983; 1993-1994; 2010-2016), Croatia (1998-2001; 2007-2016), Hungary (1991-1996; 2008-2010), Lithuania (1992-1993; 1995-1996; 1999; 2008-2016), Latvia (1992-1993; 1995-1996; 1998-1999; 2008-2016), Malta (2009-2012), Poland (1981-1996; 2007-2009), Portugal (1978-1979; 1983-1985; 1992-1995; 2008-2016), Romania (1982-1992, 1996-2000; 2007-2010), Slovenia (1991-1994; 2010-2016), Slovakia (1998-2002; 2009-2010).

We calculate two measures of financial connectivity for the EU cross-border lending network. Weighted clustering coefficient (WCC) and $WCC - in$[4]
which is widely used to analyze systemic risk.[5] WCC measures the probability that two counterparties of a country are also counterparties (i.e., have lending relationships) among themselves, weighted by their normalized cross-border exposures. WCC takes into account all types of triangle pattern lending relationships without requiring a specific flow pattern across countries, whereas $WCC - in$ requires country i to be the debtor of the other two countries such that in case country i fails to pay its obligations, the system will suffer from higher losses due to simultaneous non-repayments to lenders. Tabak et al. (2014) and Minoiu and Reyes (2013) suggest to use $WCC - in$, as higher clustering of the "in" type may reflect higher systemic risk because failure of the borrowing country in -in type of clustered relationship can trigger simultaneous non-repayments to the lender countries, leading to a systemic risk.

[4]

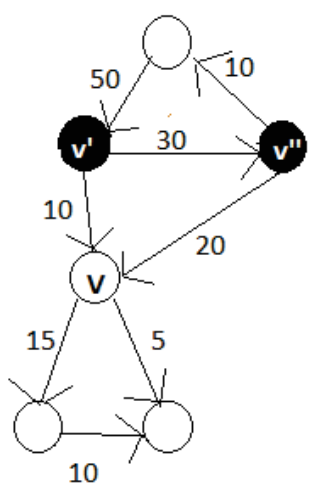

Example: The figure in the left hand side shows a hypothetical directional weighted network composed of six nodes and eight directional links across the nodes. For a given node v, N_v is defined to be the number of adjacent nodes of v such that $N_v = 4$ and $b(v', v'')$ is defined to be the number of links between neighbours of v and $w(v', v'')$ is defined to be the weights associated with these nodes. Weights are normalized to 1. N_v^{in} is defined to be the set of creditors of node v such that $N_v^{in} = \{v' \mid w(v', v) > 0\} = 2$. Then, WCC and $WCC - in$ are calculated as follows:

$$WCC(v) = \frac{\sum_{v',v'' \in N_v} w(v', v'')}{|N_v| \times (|N_v| - 1)} = \frac{30 * \frac{1}{50} + 10 * \frac{1}{50}}{4 * 3} = \frac{1}{10}$$

$$WCC - in(v) = \frac{\sum_{v',v'' \in N_v^{in}} w(v', v'')}{|N_v^{in}| \times (|N_v^{in}| - 1)} = \frac{30 * \frac{1}{50}}{2 * 1} = \frac{3}{10}$$

[5]For details and alternative patterns of WCC, refer to Clemente and Grassi (2018), and Tabak et al. (2014).

3.4. Characteristics of the EU lending network

3.4.1 Pre- and post- EU period

Descriptive statistics of the characteristics of bank-to-bank EU lending network during the pre- and post-EU periods is presented in Table 3.4. The column numbers (1)-(4) represents in-degree, in-strength(expressed in terms of constant 2016 bn USD), HHI-in and WCC-in, respectively. Post-EU period is divided into two subperiods, namely, the period from the country's membership date, that varies across countries, until the GFC and the period covering the aftermath of the GFC (2008-2016).[6] On average, countries borrowed from 4.1 countries within EU during the pre-EU period, this figure increased to 6.6 following the membership, whereas countries reduced the number of countries that they have borrowing relationship to 3.6 in the aftermath of GFC. Similarly, membership seems to increase the amount borrowed from 0.7 bn USD, on average, to 4.5 bn USD, but the figure decrased to 2.2 bn USD after the GFC. The largest increase both in the number and the amount of borrowing relationships is observed for Poland, Cyprus and Romania following their membership to the EU. The level of connectivity follows a similar pattern with degree and strength measures. On average, it rised after the membership but fell with the recent GFC. The largest increase in connectivity level is observed for Czech Republic and Estonia, following their membership, whereas the largest decrease in the level of connectivity is observed in Romania, Slovenia and Latvia after the GFC. One may expect this result, as banks tend to divert cross-border flows towards more stable countries during financial turmoil periods. The findings may suggest that although membership boosts and facilitates cross-border activities across members, it may not work during unstable

[6]Since founder countries of EU (Belgium, Germany, France, Ireland, Luxembourg, and Netherlands) have been members since 1958, they are not included in the table.

times, as members may retain lending to each other. The findings also suggest that advantages of membership could not prevent banks to cut back their lending during financial distress.

We observe the similar patterns for bank-to-non-bank EU lending network during the pre- and post-EU periods (see Table 3.5). Countries borrowed from, on average, 3.8 countries within EU during the pre-EU period, this figure increased to 5.9 following the membership, and reduced to 4.2 in the post-GFC period. During the pre-EU period the amount borrowed was 0.6 bn USD, on average, (close to the figure in BB lending). The figure increased to 2.2 bn USD (almost half of the corresponding figure in BB lending), but reduced to 1.2 bn USD after the GFC. The largest increase in terms of the number of borrowing relationships is observed for Czech Republic and largest increase in terms of the amount borrowed is observed for Poland in BNB lending market. Similar to the BB lending market, the largest increase in connectivity level is observed for Czech Republic and Estonia. On the other hand, the largest decrease in the level of connectivity is observed in Estonia, Slovenia and Romania, respectively, after the GFC.

3.4.2 Pre- and post- EUZ period

Descriptive statistics of the characteristics of EU bank-to-bank and bank-to-non-bank lending network for core members during the pre- and post-EUZ periods is presented in Table 3.6 and Table 3.7.

In BB lending market the network statistics seem to increase after the membership, but decrease following the recent GFC in all core countries. The largest change in pre-EUZ period is observed in in- and out- strength measures which represent the amount borrowed and lent, respectively. Germany experienced the largest increase in the amount lent out, namely out-strength measure, although the number of

borrowing/lending relationships change slightly. In particular, during the pre-EUZ period, Germany lent out 44.9 bn USD to the banking sector's of other European countries. The figure is almost quadrupled to 168.8 bn USD in the post-EUZ period, but declined to its pre-EUZ level, 44.7 bn USD after the GFC. In a similar manner, the number of countries that Germany lent out decreasd from 14.3, on average, in the post-EUZ period to 5.8 following the GFC. On the other hand, for Germany, both the number and the amount borrowed seem to be stable during the period under analysis. For example, unlike the amount lent out, the amount borrowed by Germany (in-strength) from European countries increased slightly from 57.8 bn USD, on average, in the 1999-2007 period to 62 bn USD in the aftermath of GFC. The largest decline in the amount borrowed is observed for France in the post-GFC period. In terms of the level of connectivity, the largest increase due to the membership is observed for Luxembourg. The connectivity level for this country was 0.52 in the pre-EUZ period, and increased to 0.77 during the 1999-2007 period. In the aftermath of GFC, the largest decline in the level of connectivity is observed for France, from 0.74 during 1999-2007 period to 0.36 during 2008-2016 period.

We observe similar patterns in BNB lending market for core members. In particular, the network statistics increased following the monetary union in almost all countries and decrased in the aftermath of GFC. Yet, it is important to note that unlike BB lending market, the network figures for core countries in the BNB lending market seem to reach, or even pass beyond their pre-EUZ period levels in terms of strength measures. Following the monetary union, the largest changes occurred in Ireland, Luxembourg and France. For example, after joining the monetary union, the amount borrowed increased by 27.6 bn USD in Ireland and the number of countries that the country borrows increased by 1.4, on average. The figures for Luxembourg are 20.3 bn USD and 3.9, respectively. In terms of the

amount lent out, the largest change is observed for France (44 bn USD). In terms of the number of countries that a country lends out, the largest change is experienced by Ireland (8.5), on average. Following the monetary union, the largest increase in the level of connectivity is observed for Luxembourg. After the GFC, all countries experienced declines in their network statistics. The largest decline in the level of connectivity is seen for Belgium. This country is followed by Ireland and Luxembourg, respectively. In the aftermath of GFC, the largest decline in terms of the amount borrowed is observed for Ireland (23.9 bn USD) and Netherlands (20.6 bn USD). Countries that Netherlands has borrowed from declined by 3.7 and countries that Ireland has lent out declined by 8.9, on average.

Descriptive statistics of the characteristics of EU bank-to-bank and bank-to-non-bank lending network for peripheral members during the pre- and post-EUZ periods is presented in Table 3.8 and Table 3.9. In BB lending market, in all peripheral countries, except Lithuania, the number of borrowing relationships and the level of connectivity declined whereas the amount borrowed increased following the monetary union. Lithuania is the only country that experience an increase in its level of connectivity (from 0.49 to 0.78). Hence, borrowing concentration ratio of all countries increased. This may be explained by the crisis that some peripheral members experienced during the same period. The following countries experienced crisis following their membership to the union: Estonia (2010-2011), Malta (2009-2012), Slovakia (2009-2010). One may expect that there may be a tendency for other members not to lend peripheral countries experiencing crisis. Also, it is important to note that few countries choose to lend those countries experiencing crisis, as reflected in their borrowing concentration ratios. This could be interpreted as the concentration of the risk on few lenders.
Unlike BB lending, in BNB lending market for peripheral countries, we observe less volatility and more stable pattern in terms of the network statistics. There is a

slight decline in the level of connectivity after the monetary union. Yet, the largest decline is observed for Lithuania and Estonia.

3.5. Regression Results

Tables 3.10 and Table 3.11 show the results of the probit model with country fixed effects which investigates the relationship between financial connectivity and probability of crisis controlling for macroeconomic characteristics and how EU(Z) membership affects this relationship for BB and BNB lending markets in EU countries.

In both lending markets, we find that an increase in the level of connectivity is associated with a decrease in the probability of crisis, as the coefficients of connectivity measures are negative and statistically significant (see benchmark models 1 and 5). In the BNB lending market, we observe the same effect for the baseline model, but for the augmented models, the level of connectivity seems to have no statistically significant effect on the probability of crisis, though the sign of the coefficient is positive.

In BB lending market, the coefficients of two-way interaction variable between connectivity and EU membership dummy variable are found to be positive and significant when EUZ is controlled in the model. However, EUZ membership seems to improve financial stability benefits from increased level of connectivity, as suggested by the negative and statistically significant interaction coefficients of connectivity with EUZ membership dummy variable (see models 3 ,4,7 and 8). This may be due to the elimination of currency risk across members through monetary union membership. In BNB lending market, unlike BB lending market, two-way interaction coefficients of connectivity with EU membership dummy are found to be negative and significant when EUZ is not controlled in the model (see

models 2 and 6). This implies that EU membership contributes to the relationship between financial connectivity and stability and improves financial stability for non-banking sector. Similar to the BB lending market, in BNB lending market EUZ membership seems to improve financial stability benefits from increased level of connectivity, as suggested by the coefficients of two-way interaction of connectivity with EUZ membership dummy variable (see models 3 and 7). When EUZ is included in the model, EU dummy variable becomes insignificant.

In both lending markets, during the pre-crisis period, we find that an increase in connectivity significantly raises the probability of crisis, irrespective of membership status, as suggested by positive and statistically significant two-way interaction coefficient of connectivity with $PreGFC$ dummy variable (see models 3,4,7, and 8). However, EU or EUZ membership is found to have no effect on the observed relationship between the financial connectivity and the probability of crisis during this period.

Finally, in BNB lending market, coefficients of EU and EUZ membership control dummy variables are found to be statistically insignificant. However, in BB lending market coefficients of EU are found to be positive and significant (see models 3,4,7 and 8) whereas coefficient of EUZ is found to be negative and significant only in model 3.

These findings imply that legislative-regulatory harmonization of EU countries seems to be inadequate in ensuring the resilience of the system. Besides being inadequate, for BB lending market EU membership has a potential to undermine the resiliency of the EU financial system, as suggested by positive and significant coefficients of $C_{t-1} * EU_t$ and EU_t dummy variable. On the other hand, both lending markets EUZ membership seems to improve financial stability benefits from increased level of connectivity.

3.6. Robustness Tests

Findings suggest that EUZ membership improves financial stability benefits from increased level of connectivity. However, one may expect it as EUZ members are required to satisfy certain macroeconomic criteria (Maastricht Criteria) to be a member and to continue their membership status. More specifically, Maastricht Criteria require member states to stay within pre-defined limits regarding inflation rate, long term interest rate and government debt-to-GDP ratio. Hence, as a first robustness check the models are re-estimated by controlling for those additional variables, as well. The sign and the significance of the coefficients of two-way interaction variable of connectivity with EUZ membership dummy variable, namely $C(t-1) * EUZ(t)$ are found to be robust (see Table C.1 in the appendix.) in both lending markets. Hence, the significant positive contribution of EUZ membership to financial stability with an increase in connectivity seems to be driven from the elimination of currency risk, rather than the satisfaction of certain macroeconomic criteria to be in the EUZ.

As a second robustness check, the models are re-estimated for alternative pre-crisis definitions: 1999-2007, 2000-2007, 2001-2007, 2002-2007, 2003-2007 2005-2007 and 2006-2007 for BB market, as cross-border lending in this market increased rapidly during pre-GFC and have greater volume compared to the BNB lending market. The results seem robust, though largest impact on the probability of crisis was obtained for the 2003-2007 period. The results with alternative pre-crisis definitions are provided in the appendix at the Table C.2. The insignificant results obtained for 2005-2007 could be due to the fact that in the year 2005, there is a slight decrease in cross-border flows across EUZ and slight increase in cross-border flows across EU compared to the previous year. The insignificant result obtained for the 2006-2007 period could be attributed to the shorter definition for the

pre-crisis period (one year). This may not be persistent enough to have an impact on the relationship between financial connectivity and stability.

The network we constructed focuses on the cross-border lending within European countries and ignores cross-border activities from and to the non-EU region. Hence, as a final check, the models are re-estimated by using the connectivity mesaure, WCC, for each country in the sample, derived from global lending network, including 177 countries. This allows us to observe financial linkages from and to the non-EU. The results are depicted in Table C.3 and C.4 in the appendix. In BB lending network, in contrast to the previous findings, the coefficients of a two-way interaction between connectivity and EU membership dummy variable turns out to be negative and statistically significant (models 3 and 4). In BNB lending network, the signs of the coefficients of three-way interaction variables remains the same but they turned to be statistically significant (model 4). Yet, in contrast to the original results, the coefficient of EUZ membership dummy variable turns out to be statistically significant and positive for BNB lending market (models 3 and 4).

As a final check, we re-estimate the models controlling for two-way interactions between $EU(Z)$ and $PreGFC$ dummy variables. The results seem robust to this specification. (see Table C.5 in the appendix.)

3.7. Conclusion

The analysis of EU cross-border lending data shows that higher level of connectivity is associated with lower probability of crisis in both BB and BNB lending markets. While single currency integration enhances the positive effect of financial connectivity on financial stability among EU countries in both lending markets, having the same legislative-regulatory framework does not have any effect in BNB lending market, but disturbs financial stability in BB lending market.

During the excessive cross-border lending period, an increase in connectivity is found to raise the probability of crisis for both lending networks. Membership status seems to have no effect on this relationship during this period.

The main policy implication of this study is that EU would benefit from deeper integration of its institutions towards financial union because single currency integration is shown to improve the resiliency of the financial system. However, excessive lending periods have to be taken with caution. Why has EUZ membership been so efficient in enhancing the positive effect of financial connectivity on stability while EU membership has not? Why does this positive effect disappear for members during excessive lending periods? Although these questions are beyond the scope of this study, answering them is relatively important for policymakers aiming to design an integrated but resilient financial union and for those who are affected by those policies.

It is important to note that the network we constructed focuses on the cross-border lending and borrowing activities within EU and ignores cross-border activities from and to the non-EU region. The cross-border lending across EU countries corresponds to 72% of their total cross-border lending. This limitation may underestimate the real cross-border exposures of member states. As another limitation, our analysis does not include the cross-border lending by Germany to non-banking sector of the European countries, as the country does not allow BIS to disclose this data. Also, our analysis does not include data on cross-border borrowing and lending activities of Italy, Spain and Austria, as it is not publicly available. Though, our estimations show that we analyzed more than 90% of all cross-border lending within EU.

Table 3.3: Membership years of the EU(Z) countries

	Membership Years	
Countries	**EU**	**EUZ**
Belgium	1958	1999
Bulgaria	2007	-
Croatia	2013	-
Cyprus	2004	2008
Czech Rep.	2004	-
Denmark	1973	-
Estonia	2004	2011
Finland	1995	2001
France	1958	1999
Germany	1958	1999
Greece	1981	2001
Hungary	2004	-
Ireland	1973	1999
Latvia	2004	2014
Lithuania	2004	2015
Luxembourg	1958	1999
Malta	2004	2008
Netherlands	1958	1999
Poland	2004	-
Portugal	1986	1999
Romania	2007	-
Slovakia	2004	2009
Slovenia	2004	2007
Sweden	1995	-
United Kingdom	1973	-

Table 3.4: Mean values of network characteristics during the pre- and post-EU period for peripheral EU countries in BB lending market

					Post-EU Period							
	Pre-EU Period				Membership-2007				2008-2016			
Countries	(1)	(2)	(3)	(4)	(1)	(2)	(3)	(4)	(1)	(2)	(3)	(4)
Bulgaria	3.1	0.3	0.66	0.49	7.0	3.6	0.40	0.64	4.2	0.7	0.61	0.36
Cyprus	4.4	0.4	0.59	0.67	7.5	6.1	0.34	0.77	3.9	7.0	0.70	0.41
C. Rep.	2.1	1.4	0.80	0.26	6.0	3.0	0.41	0.80	4.7	2.9	0.60	0.49
Estonia	2.2	0.2	0.78	0.22	4.8	3.3	0.60	0.81	3.6	0.6	0.65	0.46
Finland	5.4	1.8	0.37	0.62	5.5	6.3	0.43	0.71	4.9	15.2	0.49	0.47
Greece	6.3	2.1	0.39	0.64	5.7	4.9	0.49	0.73	3.6	5.0	0.67	0.34
Croatia	3.8	0.4	0.63	0.49	-	-	-	-	3.1	0.2	0.70	0.27
Hungary	4.2	1.2	0.58	0.66	8.0	5.0	0.28	0.73	3.7	2.1	0.66	0.38
Lithuania	3.4	0.2	0.72	0.47	5.8	2.4	0.52	0.68	3.0	0.7	0.71	0.49
Latvia	3.4	0.4	0.65	0.47	8.3	2.9	0.43	0.73	2.0	0.4	0.73	0.26
Malta	3.7	0.2	0.65	0.64	5.5	3.1	0.55	0.74	5.1	1.8	0.45	0.52
Poland	4.3	1.2	0.55	0.57	8.3	7.8	0.34	0.71	4.7	6.5	0.44	0.35
Portugal	3.4	0.4	0.56	0.39	6.5	6.1	0.39	0.70	3.9	3.9	0.66	0.45
Romania	3.4	0.6	0.60	0.49	8.0	8.9	0.42	0.92	4.8	1.7	0.57	0.38
Slovenia	4.3	0.2	0.49	0.65	5.0	1.4	0.29	0.90	1.6	0.1	0.92	0.26
Slovakia	4.8	0.8	0.65	0.71	5.0	2.2	0.50	0.79	3.9	1.6	0.62	0.41
Average	4.1	0.7	0.6	0.6	6.6	4.5	0.4	0.8	3.6	2.2	0.6	0.4
Std. Dev.	0.8	0.6	0.1	0.1	1.3	2.4	0.1	0.1	1.1	2.0	0.1	0.1

Notes: (1) In-Degree, (2) In-Strength(expressed in terms of constant 2016 bn USD), (3) HHI-in, (4) WCC-in. Croatia's membership date is the year 2013.

Table 3.5: Mean values of network characteristics during the pre- and post-EU period for peripheral EU countries in BNB lending market

					Post-EU Period							
	Pre-EU Period				Membership-2007				2008-2016			
Countries	(1)	(2)	(3)	(4)	(1)	(2)	(3)	(4)	(1)	(2)	(3)	(4)
Bulgaria	2.9	0.3	0.66	0.55	6.0	1.8	0.42	0.62	3.8	0.5	0.54	0.35
Cyprus	4.2	0.9	0.52	0.58	7.0	3.7	0.46	0.81	4.9	2.8	0.54	0.54
C.Rep.	1.8	0.2	0.45	0.26	6.8	1.2	0.35	0.65	4.8	0.8	0.46	0.47
Estonia	1.5	0.0	0.54	0.26	5.8	0.6	0.62	0.72	3.7	0.1	0.58	0.28
Finland	4.6	2.4	0.49	0.61	5.0	3.4	0.35	0.71	4.3	5.3	0.51	0.54
Greece	5.0	1.0	0.43	0.36	5.1	4.3	0.48	0.67	3.3	3.1	0.68	0.41
Croatia	3.9	0.3	0.54	0.54	-	-	-	-	4.3	0.4	0.68	0.49
Hungary	4.6	0.4	0.48	0.63	7.5	2.7	0.30	0.72	3.3	0.7	0.64	0.40
Lithuania	3.7	0.1	0.50	0.50	5.8	1.0	0.60	0.67	4.8	0.3	0.56	0.37
Latvia	3.1	0.0	0.46	0.52	5.3	0.7	0.42	0.74	3.9	0.2	0.59	0.53
Malta	3.6	0.3	0.58	0.56	5.8	0.7	0.39	0.79	5.7	1.4	0.50	0.52
Poland	4.4	0.8	0.57	0.66	6.3	4.7	0.26	0.76	3.9	1.2	0.50	0.46
Portugal	6.0	2.4	0.43	0.53	5.5	3.7	0.46	0.68	3.7	1.2	0.63	0.44
Romania	4.1	0.3	0.57	0.56	8.0	3.9	0.19	0.71	3.6	0.7	0.73	0.30
Slovenia	3.4	0.1	0.58	0.66	3.3	0.5	0.73	0.90	4.0	0.4	0.61	0.47
Slovakia	3.7	0.3	0.71	0.51	6.0	0.7	0.44	0.74	5.2	0.5	0.44	0.38
Average	3.79	0.62	0.53	0.52	5.92	2.24	0.43	0.73	4.19	1.22	0.57	0.43
Std. Dev.	1.1	0.7	0.1	0.1	1.1	1.5	0.1	0.1	0.7	1.3	0.1	0.1

Notes: (1) In-Degree, (2) In-Strength(expressed in terms of constant 2016 bn USD), (3) HHI-in, (4) WCC-in. Croatia's membership date is the year 2013.

Table 3.6: Mean values of network characteristics during the pre- and post-EUZ period for core EU countries in BB lending market

						Post-EUZ Period									
	Pre-EUZ Period					**1999-2007 Period**					**2008-2016 Period**				
Countries	(1)	(2)	(3)	(4)	(5)	(1)	(2)	(3)	(4)	(5)	(1)	(2)	(3)	(4)	(5)
Belgium	4.7	9.7	14.7	10.7	0.67	6.0	15.6	44.9	61.5	0.68	4.2	10.3	17.3	22.3	0.47
Germany	6.0	15.5	29.5	44.9	0.67	6.3	14.3	57.8	168.8	0.64	4.8	5.8	62.0	44.7	0.43
France	5.7	9.3	22.0	24.4	0.72	6.6	14.8	94.5	88.4	0.74	5.1	10.2	41.2	43.3	0.36
Ireland	5.3	7.1	6.1	3.2	0.65	7.0	15.2	67.4	38.7	0.75	2.8	7.6	26.2	11.2	0.44
Luxembourg	3.1	10.7	17.2	20.0	0.52	5.9	14.3	37.0	36.8	0.77	4.4	9.0	22.6	18.7	0.46
Netherlands	5.4	8.4	13.6	12.8	0.68	6.7	9.4	65.5	70.9	0.77	5.2	8.0	26.7	34.3	0.54
Average	5.0	10.1	17.2	19.3	0.65	6.4	13.9	61.2	77.5	0.72	4.4	8.5	32.6	29.1	0.45
Std. Dev.	0.9	2.6	7.3	13.3	0.06	0.4	2.1	18.4	44.5	0.05	0.8	1.6	15.0	12.6	0.05

Notes: (1) In-Degree, (2) Out-Degree, (3) In-Strength(expressed in terms of constant 2016 bn USD), (4) Out-Strength, (5) WCC-in.

Table 3.7: Mean values of network characteristics during the pre- and post-EUZ period for core EU countries in BNB lending market

						Post-EUZ Period									
	Pre-EUZ Period					1999-2007 Period					2008-2016 Period				
Countries	(1)	(2)	(3)	(4)	(5)	(1)	(2)	(3)	(4)	(5)	(1)	(2)	(3)	(4)	(5)
Belgium	4.4	10.8	4.0	5.4	0.61	5.0	15.1	8.5	31.1	0.80	4.7	10.8	11.8	14.4	0.45
Germany	5.3	0.0	28.8	-	0.57	5.7	0.0	34.8	-	0.66	4.7	-	32.9	-	0.53
France	5.1	10.0	6.0	7.6	0.55	5.4	15.6	22.2	51.6	0.66	4.9	11.0	18.1	39.4	0.44
Ireland	4.9	8.3	3.3	2.7	0.56	6.2	16.8	30.9	26.1	0.75	3.7	8.6	7.0	5.7	0.45
Luxembourg	2.5	12.0	1.6	9.8	0.44	6.4	13.9	21.9	14.6	0.77	5.6	9.3	22.2	9.0	0.46
Netherlands	5.5	9.5	14.3	5.8	0.56	6.8	11.4	36.5	22.7	0.72	3.1	9.2	16.0	24.8	0.52
Average	4.62	8.44	9.68	6.25	0.55	5.93	12.13	25.79	29.21	0.73	4.43	9.78	18.00	18.64	0.47
Std. Dev.	1.0	3.9	9.5	2.4	0.0	0.6	5.7	9.6	12.4	0.1	0.8	0.9	8.2	12.2	0.0

Notes: (1) In-Degree, (2) Out-Degree, (3) In-Strength(expressed in terms of constant 2016 bn USD), (4) Out-Strength, (5) WCC-in. Cross-border lending data for Germany's non-banking sector is not available, as the country does not allow to disclose it.

Table 3.8: Mean values of network characteristics during the pre- and post-EUZ period for peripheral EU countries in BB lending market

	Pre-EUZ Period				**Post-EUZ Period**			
Countries	(1)	(2)	(3)	(4)	(1)	(2)	(3)	(4)
Cyprus	4.8	1.2	0.56	0.69	3.6	6.5	0.74	0.37
Estonia	4.3	1.0	0.56	0.58	3.3	0.6	0.72	0.45
Finland	5.3	2.0	0.40	0.63	5.3	12.6	0.45	0.59
Greece	5.8	2.6	0.47	0.71	4.5	7.7	0.60	0.53
Lithuania	3.7	0.8	0.68	0.49	2.5	0.7	0.71	0.78
Latvia	3.9	0.9	0.60	0.46	2.0	0.3	0.87	0.27
Malta	4.0	0.6	0.63	0.66	5.1	1.8	0.45	0.52
Slovenia	4.5	0.5	0.45	0.70	1.9	0.3	0.85	0.33
Slovakia	5.0	1.3	0.60	0.70	3.5	1.4	0.64	0.44
Average	4.6	1.2	0.55	0.62	3.5	3.6	0.67	0.47
Std.Dev.	0.7	0.7	0.09	0.09	1.2	4.1	0.14	0.14

Notes: (1) In-Degree, (2) In-Strength(expressed in terms of constant 2016 bn USD), (3) HHI-in, (4) WCC-in.

Table 3.9: Mean values of network characteristics during the pre- and post-EUZ period for peripheral EU countries in BNB lending market

	Pre-EUZ Period				**Post-EUZ Period**			
Countries	(1)	(2)	(3)	(4)	(1)	(2)	(3)	(4)
Cyprus	4.5	1.3	0.51	0.61	4.9	2.8	0.54	0.54
Estonia	4.2	0.2	0.54	0.57	3.2	0.1	0.68	0.29
Finland	4.9	2.8	0.45	0.64	4.4	4.2	0.44	0.61
Greece	5.1	2.7	0.50	0.61	4.1	5.3	0.55	0.56
Lithuania	4.5	0.3	0.53	0.51	4.0	0.2	0.65	0.19
Latvia	3.7	0.2	0.50	0.54	4.3	0.1	0.55	0.70
Malta	3.9	0.3	0.55	0.59	5.7	1.4	0.50	0.52
Slovenia	3.4	0.2	0.61	0.71	3.9	0.5	0.63	0.52
Slovakia	4.5	0.5	0.62	0.57	5.0	0.4	0.44	0.35
Average	4.31	0.95	0.53	0.59	4.38	1.67	0.55	0.48
Std. Dev.	0.5	1.0	0.0	0.1	0.7	1.9	0.1	0.2

Notes: (1) In-Degree, (2) In-Strength(expressed in terms of constant 2016 bn USD), (3) HHI-in, (4) WCC-in.

Table 3.10: Probit model regression results for BB lending market

	WCC	**WCC**	**WCC**	**WCC**	**WCC-in**	**WCC-in**	**WCC-in**	**WCC-in**
Models	(1)	(2)	(3)	(4)	(5)	(6)	(7)	(8)
Connectivity Measure								
$Ln(C_{t-1})$	-0.447**	-0.854*	-0.748	-0.781	-0.606***	-0.901*	-0.851*	-0.911*
	(0.014)	(0.098)	(0.153)	(0.149)	(0.001)	(0.080)	(0.100)	(0.088)
$Ln(C_{t-1}) * EU_t$		0.488	0.946*	1.178**		0.360	0.833	1.077*
		(0.381)	(0.096)	(0.046)		(0.514)	(0.142)	(0.067)
$Ln(C_{t-1}) * EUZ_t$			-1.994***	-1.895***			-1.834***	-2.073***
			(0.000)	(0.000)			(0.000)	(0.000)
$Ln(C_{t-1}) * PreGFC$				3.655*				5.672**
				(0.052)				(0.048)
$Ln(C_{t-1}) * EU_t * PreGFC$				-3.760				-2.952
				(0.284)				(0.402)
$Ln(C_{t-1}) * EUZ_t * PreGFC$				-0.194				-0.698
				(0.847)				(0.593)
Control Variables								
EU_t		0.332	0.765**	0.849**		0.278	0.633*	0.724**
		(0.335)	(0.034)	(0.027)		(0.396)	(0.067)	(0.050)
EUZ_t			-0.851**	-0.580			-0.416	-0.365
			(0.029)	(0.168)			(0.209)	(0.298)
$Ln(GDPpercap)_{t-1}$	-0.458	-0.588	-1.525*	-1.003	-0.443	-0.608	-1.322*	-0.787
	(0.380)	(0.369)	(0.050)	(0.222)	(0.403)	(0.355)	(0.091)	(0.337)
$Ln(PrivCredit/GDP)_{t-1}$	0.214	0.216	0.476**	0.535**	0.242	0.240	0.402*	0.435*
	(0.300)	(0.298)	(0.030)	(0.020)	(0.250)	(0.256)	(0.068)	(0.059)
HHI_{t-1}	0.327	0.377	0.363	0.024	0.265	0.302	0.23	-0.142
	(0.322)	(0.263)	(0.291)	(0.947)	(0.452)	(0.396)	(0.528)	(0.710)
CAB_{t-1}	0.010	0.023	0.021	0.006	0.007	0.021	0.015	
	0.007	(0.746)	(0.454)	(0.509)	(0.845)	(0.806)	(0.493)	(0.636)
CAB_{t-2}	-0.067**	-0.069**	-0.077**	-0.074**	-0.063**	-0.064**	-0.075**	-0.075**
	(0.028)	(0.026)	(0.015)	(0.024)	(0.041)	(0.038)	(0.018)	(0.024)
$REER_{t-1}$	-0.018**	-0.019***	-0.016**	-0.018**	-0.019***	-0.020***	-0.019**	-0.021***
	(0.012)	(0.008)	(0.039)	(0.020)	(0.006)	(0.005)	(0.014)	(0.009)
$M3/GDP_{t-1}$	0.032***	0.032***	0.028***	0.026***	0.031***	0.032***	0.028***	0.025***
	(0.000)	(0.000)	(0.000)	(0.000)	(0.000)	(0.000)	(0.000)	(0.000)
$Unemp_{t-1}$	0.044*	0.041	0.029	0.04	0.039	0.034	0.022	0.038
	(0.059)	(0.105)	(0.288)	(0.149)	(0.102)	(0.176)	(0.414)	(0.185)
Obs.	579	581	581	581	566	568	568	568
Log-likelihood	-293.3	-292.8	-280.6	-254.9	-286.6	-286.2	-276.3	-254.6

p-value in parentheses
*** p<0.01, ** p<0.05, * p<0.1

Table 3.11: Probit model regression results for BNB lending market

	WCC	**WCC**	**WCC**	**WCC**	**WCC-in**	**WCC-in**	**WCC-in**	**WCC-in**
Models	(1)	(2)	(3)	(4)	(5)	(6)	(7)	(8)
Connectivity Measure								
$Ln(C_{t-1})$	-0.694***	0.194	0.114	0.352	-0.712***	0.123	0.133	0.294
	(0.000)	(0.784)	(0.806)	(0.463)	(0.000)	(0.759)	(0.772)	(0.536)
$Ln(C_{t-1}) * EU_t$		-0.830*	-0.349	-0.279		-0.887*	-0.295	-0.289
		(0.097)	(0.514)	(0.616)		-(0.079)	(0.580)	(0.599)
$Ln(C_{t-1}) * EUZ_t$			-1.403***	-1.541***			-2.012***	-1.988***
			(0.003)	(0.002)			(0.000)	(0.001)
$Ln(C_{t-1}) * PreGFC$				4.632**				4.589**
				(0.048)				(0.048)
$Ln(C_{t-1}) * EU_t * PreGFC$				-4.844				-4.627
				(0.187)				(0.304)
$Ln(C_{t-1}) * EUZ_t * PreGFC$				0.263				0.221
				(0.802)				(0.891)
Control Variables								
EU_t		-0.299	0.106	0.173		-0.274	0.167	0.225
		(0.383)	(0.770)	(0.652)		-(0.395)	(0.626)	(0.534)
EUZ_t			-0.423	-0.218			-0.423	-0.199
			(0.262)	(0.590)			(0.214)	(0.584)
$Ln(GDPpercap)_{t-1}$	-0.505	-0.783	-1.583**	-1.303*	-0.374	-0.584	-1.378*	-1.091
	(0.311)	(0.206)	(0.027)	(0.083)	(0.456)	-(0.348)	(0.057)	(0.146)
$Ln(PrivCredit/GDP)_{t-1}$	0.206	0.214	0.384*	0.459**	0.214	0.227	0.301	0.333
	(0.301)	(0.285)	(0.062)	(0.033)	(0.288)	-(0.264)	(0.143)	(0.117)
HHI_{t-1}	-0.061	-0.111	-0.087	-0.456	-0.092	-0.175	-0.099	-0.466
	(0.848)	(0.731)	(0.789)	(0.184)	(0.780)	-(0.601)	(0.772)	(0.190)
CAB_{t-1}	0.012	0.014	0.021	0.019	0.009	0.012	0.016	0.010
	(0.585)	(0.527)	(0.359)	(0.422)	(0.677)	(0.609)	(0.482)	(0.685)
CAB_{t-2}	-0.042*	-0.043*	-0.040*	-0.032	-0.039*	-0.040*	-0.035	-0.029
	(0.066)	(0.059)	(0.083)	(0.178)	(0.086)	(0.083)	(0.136)	(0.222)
$REER_{t-1}$	-0.012*	-0.011*	-0.005	-0.006	-0.013**	-0.015**	-0.010	-0.010
	(0.065)	(0.096)	(0.467)	(0.416)	(0.045)	(0.028)	(0.159)	(0.170)
$M3/GDP_{t-1}$	0.033***	0.035***	0.030***	0.028***	0.032***	0.033***	0.031***	0.029***
	(0.000)	(0.000)	(0.000)	(0.000)	(0.000)	(0.000)	(0.000)	(0.000)
$Unemp_{t-1}$	0.034	0.024	0.021	0.022	0.037*	0.030	0.017	0.023
	(0.124)	(0.312)	(0.398)	(0.393)	(0.090)	(0.200)	(0.499)	(0.360)
Obs.	587	587	587	587	577	577	577	577
Log-likelihood	-299.6	-298.2	-290.9	-263.2	-296.3	-294.7	-284.9	-264.5

p-value in parentheses
*** p<0.01, ** p<0.05, * p<0.1

CHAPTER IV

FINANCIAL CONNECTIVITY AND STABILITY: EVIDENCE FROM GLOBAL CROSS-BORDER LENDING MARKET

4.1. Introduction

This chapter is devoted to testing the hypothesis specified in Chapter 2 for the global lending network comprised of 177 countries. In particular, we, first, examine the structure of the BB and BNB global lending network. Understanding the structure and dynamics of the global network of cross-country lending and borrowing relationships are important in assessing how the global financial markets respond to shocks, and how systemic risk propagates. Second, we test whether there is a relationship between financial connectivity and stability and whether this relationship changes during credit booms and capital inflow upsurges for the global BB and BNB lending networks. Expanding the set of countries under analysis allows us to compare the results with that of the core to core lending network and helps us to understand how representative these data are of true global linkages. In addition, we are able to group countries based on their level of development and test whether the documented relationship between connectivity and stability changes for emerging countries. We find that increase in global financial

connectivity in BB lending network seems to reduce the probability of systemic crises, but this effect is found to be eliminated in credit boom periods. On the other hand, an increase in local connectivity is found to increase the probability of crisis, controlling for macroeconomic variables and credit boom periods. This effect seems to be driven mainly by emerging countries. In both lending markets, capital inflow periods do not affect the relationship between connectivity and probability of crisis significantly. In BNB lending network, connectivity level seems to have no effect on the probability of crisis, either at normal times or at excessive liquidity periods.

4.2. Data and Methodology

Cross-border flows to construct global banking network are obtained from BIS Locational Banking Statistics (LBS). Our sample contains 177 countries, including advanced countries that report their bilateral positions (assets and liabilities) to the BIS (reporting countries) and non-reporting periphery countries vis-à-vis which positions are reported for the 1978-2016 period. We construct the global banking network for BB and BNB lending market separately by using the data from the reporting countries. These countries also report liabilities, which we use to infer assets of non-reporting countries vis-a-vis reporting countries as suggested by Minoiu et al. (2015). Hence, the liabilities of reporting countries with respect to non-reporting countries are assumed to be the claims of non-reporting countries vis-à-vis reporting countries. However, we do not have data on linkages across non-reporting countries. As Minoiu et al. (2015), we assume that the degree and the strength of these relationships among non-reporting countries are negligible within the global lending network.

As in the previous chapters, following Minoiu and Reyes (2013), we consider only positive flows and replace negative flows with zeros because positive flows are net

investments (i.e. investments minus repayments) whereas negative flows are net repayments. We sum the exchange rate adjusted changes of the four quarters to obtain annualized cross-border flows. Those flows are expressed in terms of constant 2016 USD. In constructing our BB and BNB networks, we model each year as a separate weighted and directed network where nodes represent the countries, directed edges represent the cross-border lending relationship across countries and weights represent the intensity of cross-border exposures.

We use the same baseline probit model specification with country fixed effects as in the Chapter 2 to test our hypotheses. The dependent variable is a financial stability indicator that takes a value of 1 if there is a crisis in country i in year t, and 0 otherwise. The systemic crisis periods for EU countries in the sample are retrieved from European Systemic Risk Board (Lo Duca et al., 2017)) and the systemic crisis periods for the remaining countries are retrieved from Laeven and Valencia (2018). The systemic crisis include banking, currency and sovereign crisis. To determine credit boom and capital inflow dates for 177 countries we apply the same methodology as in Chapter 2. In particular, by using HP filter, we obtain the de-trended series of the percentage growth rate of private-credits-to-GDP ratio and the ratio of foreign direct investment-to-GDP for each country and the year. If the de-trended series for the private-credits-to-GDP ratio in a year for a country is one standard deviation above its country related historical average,that year is assumed to be a credit boom period for that country. Similarly, if the de-trended series for the the ratio of foreign direct investment-to-GDP in a year for a country is one standard deviation above its country related historical average, that year is assumed to be a capital inflow period for that country.

We modify the baseline model by including a two-way interaction variable with connectivity measure and a dummy variable, $Emerging_{it}$, for emerging countries.[1]

[1]We use World Bank classification to determine emerging countries. According to this classifi-

In addition, a three-way interaction variable between connectivity measure, credit boom or capital inflow periods and emerging country dummy variable is included to test whether the effect of connectivity on probability of crisis changes for emerging markets in credit boom or capital inflow periods. One may expect that emerging markets benefit more from increase in connectivity so that they are able to attract more flows, but this may also facilitate the spillover effects during excessive liquidity periods such as credit booms and capital inflows and makes them more exposed to financial distress, especially when they are dependent on few borrowers and lenders, as documented by Luna and Hardy (2019) for bank-to-non bank flows. They claim that banks' exposures to non-bank borrowers have become more concentrated through time.

4.3. Characteristics of the Global BB and BNB Lending Network

The average global connectivity in BB and BNB lending networks, that's the probability that any two countries in the network are connected; is almost stable around 24 percent during the sample period (see Table 4.1). The average local connectivity measured by BCC; the probability that any two counterparties of a country are also counterparties of themselves; ranges between 35 percent in non-crisis and 42 percent in capital inflow periods for BB lending network. This measure ranges between 38 percent in crisis and 47 percent in capital inflow periods for BNB lending network. Weighted local connectivity, WCC, in BB (BNB) lending network fluctuates between 61 (64) percent in crisis periods and 76 (77) percent in capital inflow periods. On average, the highest levels of connectivity measures for the global lending network are observed in capital inflow periods in

cation, among 177 countries in the sample, 53 of them are emerging countries.

both networks, whereas the highest levels for core to core lending network are observed in non-crisis periods as shown in Chapter 2.

Other characteristics of the global cross-border BB and BNB lending networks are presented in Table 4.1, as well. We observe that in the global BB network, countries borrowed from (lent to), on average, 3.5 (37.9) countries in non-crisis periods, whereas the figure in crisis periods is 5.2 (46.2). In the BNB network, countries borrowed from (lent to), on average, 3.9 (46.1) countries in non-crisis periods and 5.6 (54.6) during crisis periods, as lending to non-banking sector may regarded as safer in crisis periods.

Strength measures indicate that during the overall analysis period, average cross-border flows borrowed/lent across BB network (in- and out-strength statistics) is almost two times that of the BNB network. The highest amount of average cross-border flows borrowed (lent out) are observed at crisis (capital inflow) periods in both networks. In the BNB network, we observe less fluctuations in terms of network statistics.

The highest levels in the second-order statistics are observed during capital inflow and non-crisis periods, as economic conditions are expected to be more favorable in terms of lending during those periods. For example, in the BB network, ANND (in-out) figure suggests that debtors of a creditor country received funding from, on average, 55.9 countries in non-crisis periods, but 49 countries in crisis periods. In the BB network, average second order cross-border flows were highest in credit boom (ANNS in-out) and non-crisis periods (ANNS out-out, ANNS out-in), and lowest at crisis periods. In the BNB lending network, average second-order flows were highest in non-crisis periods.

In addition, we examine how network statistics evolve during the period of 1978-2016 in BB and BNB lending networks (see Figure 4.1 to 4.4) and in the

selected years (see Table 4.2). All network statistics in both lending networks seem to increase in the pre-GFC and decrease in the aftermath of GFC. The change in BB lending network is higher than that of BNB lending network. For example, in BB lending network amount lent out was 155.2 bn USD in the year 2007, but declined to 35.4 bn USD in the year 2009. This measure declined from 72 bn USD to 22.3 bn USD in 2009 in BNB lending network. Average local connectivity, BCC, was 70 percent in BB lending network in the year 2007 but reduced to 33 percent in 2009. The figures for BNB lending network was 63 percent and 53 percent, respectively. In terms of connectivity level, BNB lending network seem to closer to pre-GFC levels than BB lending network in the post-GFC period and seem to be affected less from the GFC compared to the BB lending network.

4.4. Regression Results

4.4.1 The relationship between financial connectivity and financial stability

Summary of the regression results of the probit models with country fixed effects are shown in Table 4.3 and 4.4 for BB and BNB lending markets, respectively. In the tables, intersection of each group of regressors depicted between the lines and each column corresponds to a model controlling for either credit boom or capital inflow periods and macroeconomic variables, as indicated in the column labeled as *"Control"*. The detailed results of models, including control variables, are provided at the Appendix D[2] and table numbers corresponding to each model at the Appendix D are indicated at the last columns of Table 4.3 and 4.4. In the

[2]At Appendix D, in each table, columns with odd-numbers (1, 3, 5) show the estimations with contemporaneous connectivity measure and dummy variable (credit boom or capital inflow) and the columns with even numbers (2, 4, 6) show the models estimated with one period lagged values of these variables.

summary tables, $Ln(C)$ corresponds to the connectivity measure which is either FC, BCC or WCC as indicated in the column labels. Columns with (t) show the estimations with contemporaneous connectivity measure and dummy variable (credit boom or capital inflow) and the columns with $(t-1)$ show the models estimated with one period lagged values of these variables. For macroeconomic variables, all significant lags are included in the models. In all of the models, the dependent variable is a crisis dummy variable.

We find that in BB lending network, unlike core network, the coefficients of connectivity measures are statistically significant and negative in the contemporaneous model where connectivity is measured at a global level, whereas they are significant and positive in lagged models where connectivity is measured at a local level. The results imply that as global financial connectivity increases, probability of crisis decreases in the global network, but an increase in the local connectivity level is found to be associated with an increase in the probability of crisis. On the contrary, in BNB lending network, connectivity level seems to have no significant effect on the probability of crisis, regardless of the measure used for connectivity.

We also test whether the observed relationship between financial connectivity and probability of crisis changes for emerging countries by including in the model an interaction variable between connectivity measure and the dummy variable indicating emerging countries. We find that in both networks, coefficients of global connectivity measures are statistically significant and positive in the lagged models whereas coefficients of local connectivity measures are statistically significant and negative in the contemporaneous models, controlling for either credit boom or capital inflow periods. Two-way interaction coefficient of connectivity measure with emerging country dummy variable is found to be statistically significant and negative for global connectivity and positive for local connectivity. The effect

seems to be more pronounced in BB lending network compared to the BNB lending network. In all models, coefficients of two-way interaction of connectivity measure with emerging country dummy variable is higher than that of coefficients of connectivity measure. These results imply that for emerging market countries, unlike the other countries in the sample, increasing their global connectivity has benefits for the resilience of their financial system whereas increasing their local connectivity has risks in terms of increasing their probability of crisis.

4.4.2 Credit boom and capital inflow periods

We test whether the observed relationship between financial connectivity and the probability of crisis changes in credit boom and capital inflow periods by including in the model an interaction variable between connectivity measure and the dummy variable indicating credit boom or capital inflow periods.

The results of the probit models with interaction variable between credit boom periods and connectivity measures show that in BB lending network, the coefficient of global connectivity in contemporaneous model is statistically significant and negative whereas the coefficient of local connectivity in lagged models are positive and significant, as concentrating on few lenders and borrowers has a potential to damage the resilience of the financial system by increasing the probability of crisis. Interaction coefficients are found to be statistically significant and positive only in the contemporaneous model where connectivity is measured globally. Hence, the negative relationship observed between the global connectivity and the probability of crisis in the contemporaneous model is completely eliminated in credit boom periods at which there is excess liquidity in the market. On the other hand, credit boom periods are found to have no effect on the relationship between local connectivity and the probability of crisis in BNB lending network. Unlike BB lending network, in BNB lending network, the coefficients of connectivity measures

and the coefficients of interaction variables are statistically insignificant in all models. One explanation to this outcome could be that cross-border flows to the non-banking sector are channeled into real economy, and may not lead to destabilization effect, as also supported by the findings for the core network discussed in the Chapter 2.

The results of the probit models with interaction variable between capital inflow periods and connectivity measures show that in BB lending network, similar to the credit boom model findings, an increase in the level of global connectivity is found to reduce the probability of crisis in the contemporaneous model, but an increase in the level of local connectivity is found to raise the probability of crisis in the lagged models. Coefficients of interaction variables are found to be statistically insignificant in all models. This implies that capital inflow periods have no significant effect on the relationship between connectivity and the probability of crisis in BB lending network. In BNB lending network, the level of connectivity, either global or local, seem to have no significant effect on the probability of crisis and that capital inflow periods do not have any effect on the relationship between connectivity and the probability of crisis. The results suggest that non-bank borrowers are less sensitive to credit booms and capital inflow periods than bank borrowers. This outcome is also supported by the findings for the core network explained in Chapter 2. Also, as discussed in the previous section, the network statistics for BNB lending network seem to be less volatile during the overall period versus credit boom and capital inflow periods, as shown by Table 4.1.

We also test whether the observed relationship between financial connectivity and the probability of crisis during credit boom and capital inflow periods changes for emerging countries by including in the model a three-way interaction variable between connectivity measure, credit boom or capital inflow dummy variable and the dummy variable indicating emerging countries.

In credit boom models, for BB lending network, coefficient of connectivity measure is positive and significant for global connectivity in the lagged model whereas it is negative and significant for local connectivity in the contemporaneous model. Coefficients of two-way interaction of connectivity measures with emerging country dummy variable are found to be statistically significant in all model specifications. In particular, for emerging market countries, the positive (negative) relationship observed between the global (local) connectivity and the probability of crisis is completely eliminated. Hence, for those countries an increase in the level of global connectivity is found to be associated with a decline in the probability of crisis whereas an increase in the level of local connectivity (i.e. concentrating on few lenders) is found to be associated with an increase in the probability of crisis. However, we find that the decline associated with an increase in global connectivity level is eliminated during credit booms, as suggested by two-way interaction coefficient of connectivity with credit boom periods in the contemporaneous model. Coefficients of three-way interaction between connectivity measure, credit boom and emerging country dummy variable are found to have no effect on the observed relationship between connectivity and the probability of crisis. We obtain similar results for BNB lending network. The only difference is that unlike BB lending network, credit boom periods are found to have no significant effect on the relationship between global connectivity and the probability of crisis, as suggested by statistically insignificant two-way interaction of global connectivity with credit boom periods.

The findings for capital inflow models including three-way interaction variable are similar to those for credit boom models for both BB and BNB lending networks. The only difference is that three-way interaction between connectivity measure, capital inflow and emerging country dummy variable is found to be significant and negative in the contemporaneous model where connectivity is measured globally.

This finding implies that for emerging countries, during capital inflow periods an increase in the level of global connectivity is associated with a decline in the probability of crisis while any change in the level of local connectivity has no significant effect. This is an expected outcome as capital inflows, especially to the non-banking sector, have a potential to contribute to the economic growth which eventually leads to a decline in the probability of crisis.

4.5. Robustness Tests

As a first robustness check, we re-estimate the models by controlling for two-way interaction variable between credit boom and emerging country dummy variables ($Boom * Emerging$) for credit boom models and two-way interaction variable between capital inflow and emerging country dummy variables ($Inflow * Emerging$) for capital inflow models. The results seem almost robust. The only difference is that in BNB lending network, three-way interaction coefficient of connectivity, credit boom periods and emerging country dummy variable is found to be significant and positive in the lagged model where connectivity is measured globally and that three-way interaction coefficient of connectivity, capital inflow periods and emerging country dummy variable is found to be positive and significant in the lagged model where connectivity is measured locally. (see Tables E.1, E.2, E.3 and E.4)

As a second check, we re-estimate the models by including three-way interaction variable between connectivity, credit boom and capital inflow periods to observe the simultaneous impact of credit boom and capital inflow periods on the relationship between connectivity and the probability of crisis. In BB lending network, three-way interaction variable is found to be negative and significant in lagged models where connectivity is measured locally. Besides, credit boom periods

is found to have positive and significant effect on the relationship between connectivity and the probability of crisis only in the contemporaneous model where connectivity is measured globally, as suggested by the coefficient of two-way interaction between connectivity and credit boom periods. In BNB lending network, all variables of interest turn out to be insignificant in all model specifications. (see Tables E.5 and E.6 in the appendix.)

As a third check, we re-estimate the models by introducing two-way interaction between dummy variable taking value of one for the 2008-2016 period; 0 otherwise ($D2008$) and all the regressors in the models.[3] The aim is to test whether there is a structural change after the recent GFC. The relationship between connectivity and the probability of crisis is found to be robust. In particular, as the level of connectivity increases, the probability of crisis seems to decrease. Yet, in both networks, an increase in the level of connectivity during the period of 2008-2016 is found to be associated with an increase in the probability of crisis in all models where connectivity is measured globally. On the other hand, for models where connectivity is measured locally, an increase in the level of connectivity during the period of 2008-2016 is found to be associated with a decrease in the probability of crisis. In BB lending network, during credit boom periods, any increase in the level of connectivity seems to increase the probability of crisis, but at credit booms experienced in the aftermath of GFC, an increase in connectivity is found to decrease the probability of crisis in the lagged model. In BNB lending network, credit boom periods seem to have no significant effect on the relationship between connectivity and the probability of crisis, either before or after the recent GFC. In both lending networks, capital inflow periods seem to have positive and significant effect on this relationship only in models where connectivity is measured globally.

[3]In BB lending market, for credit boom models where connectivity is measured locally and for the capital inflow lagged models where connectivity is measured locally, two-way interaction variable between $D2008$ dummy variable and the control variables, except GDP per capita, are excluded from the model.

However, capital inflows after the GFC are found to have negative and significant impact on this relationship. (see Tables E.7, E.8, E.9 and E.10 in the appendix.)

4.6. Conclusion

We analyzed cross-border lending and borrowing relationships within BB and BNB lending networks including 177 countries for the 1978-2016 period. Our findings suggest that an increase in global financial connectivity in BB lending network is associated with a decline in the probability of systemic crises, but this effect is found to be eliminated in credit boom periods. On the other hand, an increase in local connectivity is associated with an increase in the probability of crisis, controlling for macroeconomic variables and credit boom periods. Besides, in both lending markets we find that capital inflow periods do not affect the relationship between connectivity and probability of crisis. On the contrary, for core to core lending network, as discussed in Chapter 2, we find that an increase in financial connectivity is associated with a decline in the probability of crises in both networks, regardless of the measure used to calculate connectivity level. However, this effect is found to be mitigated, and even completely eliminated in credit boom and capital inflow periods. In BNB lending network, connectivity level seems to have no effect on the probability of crisis, either at normal times or at excessive liquidity periods. For core to core BNB lending network, we have shown that an increase in the level of connectivity does not have any impact in credit boom periods whereas it increases the probability of crisis in capital inflow periods, yet this effect is found to be limited to short-term. For emerging countries, though it is beneficial for them to increase their global connectivity level, as exposure dissipates across several lenders, increase in their local connectivity is found to be associated with an increase in the probability of crisis.

Our findings suggest that members of core to core lending network benefits from an increase in the level of global as well as local connectivity, as probability of crisis is found to decrease. Yet, for members of global lending network increase in local connectivity is found to increase the probability of crisis. This effect seems to be driven mainly by emerging countries. Besides, core to core lending network seems to be more sensitive to excessive liquidity periods, as positive effect of an increase in financial connectivity on financial stability is found to be eliminated in these periods. For global cross-border lending network this effect is observed only for credit boom periods in BB lending network. Hence, in terms of global lending, policy-makers should monitor risk concentration of lenders and borrowers. Setting target concentration ratios for global lenders may ensure the risk diversification. Also, policy-makers may reduce risks associated with cross-border lending by enforcing policies that encourage transfer of cross-border flows to the real economy rather than banking sector during excessive liquidity periods, BNB lending network is shown to be less sensitive to excessive liquidity peeriods than BB lending network.

Table 4.1: Descriptive network statistics

		Overall		Crisis		Non Crisis		Boom		Inflow	
BB Network	**Unit**	**Mean**	**Std Dev**	**Mean**	**Std Dev**	**Mean**	**Std Dev**	**Mean**	**Std Dev**	**Mean**	**Std Dev**
Connectivity Measures											
FC	[0,1]	0.24	0.03	0.23	0.03	0.24	0.03	0.23	0.03	0.24	0.03
BCC	[0,1]	0.35	0.34	0.36	0.32	0.35	0.34	0.38	0.34	0.42	0.34
WCC	[0,1]	0.74	0.29	0.61	0.35	0.75	0.28	0.75	0.28	0.76	0.28
First Order Statistics											
In-degree	links	3.6	3.6	5.2	3.9	3.5	3.5	4.0	3.7	4.3	3.7
Out-degree	links	39.8	21.3	46.2	20.9	37.9	21.0	38.2	19.8	42.3	22.5
In-strength	USD bn	4.9	25.2	15.7	56.5	4.1	20.9	6.2	24.6	7.5	46.2
Out-strength	USD bn	53.7	81.9	77.8	112.5	46.7	69.0	61.9	91.4	80.5	132.2
Second Order Statistics											
ANND (in-in)	links	9.1	2.5	8.3	1.9	9.1	2.6	8.8	2.5	9.0	2.7
ANND (in-out)	links	55.3	13.4	49.0	13.2	55.9	13.3	54.4	13.2	55.8	12.4
ANND (out-out)	links	12.1	8.3	9.7	7.6	12.8	8.4	11.4	6.6	12.2	8.8
ANND (out-in)	links	7.7	2.1	7.6	1.7	7.8	2.3	7.4	1.9	7.8	2.4
ANNS (in-in)	USD bn	56.5	59.5	40.2	33.2	58.0	61.2	59.9	53.9	59.9	64.3
ANNS (in-out)	USD bn	80.8	67.2	59.7	42.8	82.6	68.6	85.3	63.0	84.8	72.1
ANNS (out-out)	USD bn	19.4	23.9	12.6	12.3	21.4	26.0	19.5	21.0	21.3	29.6
ANNS (out-in)	USD bn	19.5	22.7	13.6	10.4	21.2	24.9	19.2	18.9	20.0	25.5
BNB Network											
Connectivity Measures											
FC	[0,1]	0.25	0.04	0.25	0.04	0.25	0.04	0.25	0.04	0.25	0.04
BCC	[0,1]	0.40	0.33	0.38	0.30	0.40	0.33	0.44	0.32	0.47	0.30
WCC	[0,1]	0.75	0.29	0.64	0.34	0.76	0.28	0.76	0.29	0.77	0.27
First Order Statistics											
In-degree	links	4.1	3.4	5.6	3.9	3.9	3.4	4.4	3.4	4.8	3.4
Out-degree	links	48.0	26.8	54.6	26.7	46.1	26.6	45.9	23.6	47.8	27.5
In-strength	USD bn	2.4	14.1	9.5	29.3	1.9	12.1	2.8	16.0	4.4	27.1
Out-strength	USD bn	28.7	59.3	39.8	69.4	25.5	55.6	27.2	31.0	48.6	113.1
Second Order Statistics											
ANND (in-in)	links	8.3	2.7	7.7	2.2	8.4	2.7	8.0	2.4	8.1	2.8
ANND (in-out)	links	65.9	14.9	56.7	12.6	66.7	14.8	64.3	14.6	15.1	15.1
ANND (out-out)	links	11.9	9.1	10.8	7.9	12.3	9.3	11.0	6.9	13.8	9.6
ANND (out-in)	links	7.4	2.3	7.7	1.9	7.3	2.4	7.0	1.9	7.7	2.3
ANNS (in-in)	USD bn	17.8	19.4	13.6	12.4	18.1	19.9	16.8	17.1	17.6	20.2
ANNS (in-out)	USD bn	39.1	45.1	27.4	21.2	40.2	46.5	36.1	35.5	39.5	45.1
ANNS (out-out)	USD bn	9.5	14.0	6.6	7.2	10.3	15.3	7.3	7.6	10.9	14.5
ANNS (out-in)	USD bn	9.0	11.4	6.7	6.7	9.7	12.3	6.9	6.5	9.2	10.9

Table 4.2: Descriptive network statistics in selected years

		1980		2007		2009		2016	
BB Network	**Unit**	**Mean**	**Std Dev**	**Mean**	**Std Dev**	**Mean**	**Std Dev**	**Mean**	**Std Dev**
Connectivity Measures									
BCC	[0,1]	0.42	0.28	0.70	0.25	0.33	0.19	0.43	0.20
WCC	[0,1]	0.59	0.29	0.85	0.24	0.57	0.31	0.65	0.28
First Order Statistics									
In-degree	links	3.0	3.1	5.3	4.9	3.5	3.2	5.5	4.2
Out-degree	links	46.8	20.5	42.3	26.9	26.5	17.3	40.2	23.0
In-strength	USD bn	2.45	8.59	19.60	86.71	4.65	16.62	5.19	17.87
Out-strength	USD bn	38.81	40.86	155.17	215.72	35.37	64.31	37.92	60.57
Second Order Statistics									
ANND (in-in)	links	7.10	1.62	15.00	1.99	7.70	1.36	10.66	1.52
ANND (in-out)	links	59.30	11.90	64.59	13.73	40.99	12.65	56.15	10.15
ANND (out-out)	links	8.53	4.52	20.24	11.40	10.04	5.87	13.93	7.95
ANND (out-in)	links	6.49	0.98	11.02	2.22	6.96	1.11	9.36	1.51
ANNS (in-in)	USD bn	27.05	15.16	232.15	132.10	32.19	18.26	38.51	17.89
ANNS (in-out)	USD bn	57.76	26.39	275.62	126.06	56.22	36.26	54.16	35.88
ANNS (out-out)	USD bn	7.45	4.42	85.29	56.89	10.78	10.21	12.69	7.53
ANNS (out-in)	USD bn	7.22	3.03	81.70	49.50	13.59	7.88	14.14	7.26
BNB Network									
Connectivity Measures									
BCC	[0,1]	0.59	0.21	0.63	0.23	0.37	0.21	0.53	0.21
WCC	[0,1]	0.87	0.24	0.85	0.25	0.57	0.28	0.73	0.24
First Order Statistics									
In-degree	links	2.8	2.9	6.3	4.5	5.1	3.5	7.1	4.0
Out-degree	links	48.4	28.9	54.6	31.5	41.7	25.1	54.2	27.3
In-strength	USD bn	0.87	3.01	8.34	32.80	2.69	9.57	3.97	17.68
Out-strength	USD bn	15.01	17.72	72.02	141.46	22.26	33.24	30.20	54.97
Second Order Statistics									
ANND (in-in)	links	6.14	1.23	13.26	1.27	8.59	0.80	12.75	1.45
ANND (in-out)	links	70.68	16.55	77.77	13.04	60.85	14.08	70.43	10.03
ANND (out-out)	links	8.51	5.18	18.10	11.68	12.69	10.76	16.04	8.78
ANND (out-in)	links	6.24	1.03	10.55	1.87	7.90	1.13	10.00	1.51
ANNS (in-in)	USD bn	3.11	0.82	54.98	25.79	16.20	8.62	22.85	14.57
ANNS (in-out)	USD bn	25.24	10.42	125.14	98.38	29.67	15.36	37.47	20.90
ANNS (out-out)	USD bn	2.22	1.47	28.69	26.21	6.95	6.50	10.38	7.67
ANNS (out-in)	USD bn	2.90	1.22	25.69	17.34	7.68	5.67	9.96	7.01

Table 4.3: Regression results summary for BB lending market

	FC		BCC		WCC		Control	Table
	(t)	(t-1)	(t)	(t-1)	(t)	(t-1)		No.
$Ln(C)$	-0.610*	0.297	0.050	0.296**	0.136	0.324**	Booms	D.1
	(0.061)	(0.366)	(0.678)	(0.018)	(0.406)	(0.050)		
$Ln(C)$	-0.661**	0.275	0.049	0.294**	0.129	0.313*	Inflows	D.5
	(0.041)	(0.401)	(0.687)	(0.019)	(0.432)	(0.060)		
$Ln(C)$	-0.020	1.006**	-0.397**	-0.030	-0.320	0.040	Booms	D.3
	(0.960)	(0.010)	(0.012)	(0.850)	(0.115)	(0.846)		
$Ln(C) * Emerging_t$	-1.619***	-2.042***	1.044***	0.793***	1.250***	0.781**	Booms	D.3
	(0.010)	(0.001)	(0.000)	(0.002)	(0.000)	(0.024)		
$Ln(C)$	-0.102	0.956**	-0.397**	-0.034	-0.334	0.023	Inflows	D.7
	(0.795)	(0.015)	(0.012)	(0.833)	(0.100)	(0.910)		
$Ln(C) * Emerging_t$	-1.533**	-1.968***	1.046***	0.798***	1.281***	0.794**	Inflows	D.7
	(0.014)	(0.002)	(0.000)	(0.002)	(0.000)	(0.023)		
$Ln(C)$	-0.777**	0.198	0.032	0.291**	0.118	0.319*	Booms	D.9
	(0.023)	(0.563)	(0.792)	(0.021)	(0.473)	(0.055)		
$Ln(C) * Boom$	1.818*	1.058	0.140	0.036	0.155	0.042	Booms	D.9
	(0.080)	(0.306)	(0.305)	(0.788)	(0.343)	(0.791)		
$Ln(C)$	-0.726**	0.206	0.045	0.298**	0.126	0.318*	Inflows	D.13
	(0.035)	(0.556)	(0.714)	(0.019)	(0.447)	(0.057)		
$Ln(C) * Inflow$	0.454	0.448	0.023	-0.025	0.021	-0.032	Inflows	D.13
	(0.576)	(0.574)	(0.833)	(0.822)	(0.874)	(0.807)		
$Ln(C)$	-0.200	0.887**	-0.403**	-0.020	-0.328	0.041	Booms	D.11
	(0.624)	(0.029)	(0.011)	(0.899)	(0.107)	(0.841)		
$Ln(C) * Emerging_t$	-1.589**	-2.021***	1.068***	0.862***	1.285***	0.883**	Booms	D.11
	(0.012)	(0.002)	(0.000)	(0.001)	(0.000)	(0.017)		
$Ln(C) * Boom$	1.790*	1.134	0.105	-0.007	0.126	0.016	Booms	D.11
	(0.086)	(0.278)	(0.452)	(0.959)	(0.443)	(0.922)		
$Ln(C) * Boom * Emerging_t$	-0.046	-0.100	-0.222	-0.440	-0.343	-0.563	Booms	D.11
	(0.753)	(0.497)	(0.541)	(0.218)	(0.621)	(0.364)		
$Ln(C)$	-0.237	0.837**	-0.380**	-0.024	-0.321	0.035	Inflows	D.15
	(0.564)	(0.042)	(0.017)	(0.884)	(0.116)	(0.866)		
$Ln(C) * Emerging_t$	-1.449**	-1.915***	1.116***	0.837***	1.430***	0.896**	Inflows	D.15
	(0.021)	(0.003)	(0.000)	(0.001)	(0.000)	(0.015)		
$Ln(C) * Inflow$	0.709	0.606	-0.014	-0.046	-0.004	-0.049	Inflows	D.15
	(0.392)	(0.455)	(0.904)	(0.687)	(0.978)	(0.712)		
$Ln(C) * Inflow * Emerging_t$	-0.242*	-0.144	-0.420	-0.195	-0.752	-0.472	Inflows	D.15
	(0.053)	(0.243)	(0.165)	(0.534)	(0.171)	(0.385)		

p-value in parentheses
*** p<0.01, ** p<0.05, * p<0.1

Table 4.4: Regression results summary for BNB lending market

	FC		BCC		WCC		Control	Table
	(t)	(t-1)	(t)	(t-1)	(t)	(t-1)		No.
$Ln(C)$	-0.111	0.488	-0.061	-0.044	-0.034	0.198	Booms	D.2
	(0.724)	(0.122)	(0.578)	(0.690)	(0.804)	(0.160)		
$Ln(C)$	-0.135	0.475	-0.072	-0.072	-0.055	0.150	Inflows	D.6
	(0.668)	(0.133)	(0.514)	(0.514)	(0.692)	(0.288)		
$Ln(C)$	0.386	1.164***	-0.321**	-0.198	-0.158	0.092	Booms	D.4
	(0.266)	(0.001)	(0.017)	(0.141)	(0.334)	(0.576)		
$Ln(C) * Emerging_t$	-1.709***	-2.373***	0.740***	0.443*	0.416	0.372	Booms	D.4
	(0.001)	(0.000)	(0.001)	(0.052)	(0.166)	(0.229)		
$Ln(C)$	0.353	1.127***	-0.338**	-0.241*	-0.184	0.032	Inflows	D.8
	(0.308)	(0.001)	(0.012)	(0.075)	(0.264)	(0.846)		
$Ln(C) * Emerging_t$	-1.680***	-2.295***	0.756***	0.482**	0.430	0.412	Inflows	D.8
	(0.001)	(0.000)	(0.001)	(0.035)	(0.152)	(0.183)		
$Ln(C)$	-0.116	0.490	-0.071	-0.039	-0.044	0.201	Booms	D.10
	(0.718)	(0.132)	(0.519)	(0.721)	(0.753)	(0.157)		
$Ln(C) * Boom$	0.063	-0.019	0.111	-0.045	0.103	-0.028	Booms	D.10
	(0.939)	(0.981)	(0.430)	(0.743)	(0.530)	(0.860)		
$Ln(C)$	-0.139	0.490	-0.068	-0.059	-0.055	0.154	Inflows	D.14
	(0.674)	(0.141)	(0.537)	(0.598)	(0.696)	(0.279)		
$Ln(C) * Inflow$	0.023	-0.089	-0.035	-0.102	-0.008	-0.038	Inflows	D.14
	(0.970)	(0.882)	(0.760)	(0.383)	(0.953)	(0.781)		
$Ln(C)$	0.342	1.165***	-0.328**	-0.191	-0.165	0.095	Booms	D.12
	(0.335)	(0.001)	(0.015)	(0.157)	(0.314)	(0.565)		
$Ln(C) * Emerging_t$	-1.684***	-2.387***	0.746***	0.463**	0.420	0.385	Booms	D.12
	(0.001)	(0.000)	(0.001)	(0.045)	(0.175)	(0.230)		
$Ln(C) * Boom$	0.334	0.066	0.095	-0.066	0.098	-0.035	Booms	D.12
	(0.694)	(0.936)	(0.516)	(0.637)	(0.552)	(0.827)		
$Ln(C) * Boom * Emerging_t$	-0.120	0.042	-0.118	-0.191	-0.064	-0.088	Booms	D.12
	(0.436)	(0.782)	(0.773)	(0.615)	(0.926)	(0.895)		
$Ln(C)$	0.253	1.105***	-0.324**	-0.230*	-0.183	0.023	Inflows	D.16
	(0.485)	(0.003)	(0.016)	(0.090)	(0.266)	(0.892)		
$Ln(C) * Emerging_t$	-1.515***	-2.253***	0.831***	0.520**	0.438	0.269	Inflows	D.16
	(0.004)	(0.000)	(0.000)	(0.029)	(0.164)	(0.403)		
$Ln(C) * Inflow$	0.392	0.049	-0.088	-0.129	-0.024	-0.053	Inflows	D.16
	(0.536)	(0.938)	(0.450)	(0.278)	(0.858)	(0.698)		
$Ln(C) * Inflow * Emerging_t$	-0.262**	-0.070	-0.346	-0.079	-0.017	0.854	Inflows	D.16
	(0.045)	(0.577)	(0.234)	(0.774)	(0.975)	(0.140)		

p-value in parentheses
*** p<0.01, ** p<0.05, * p<0.1

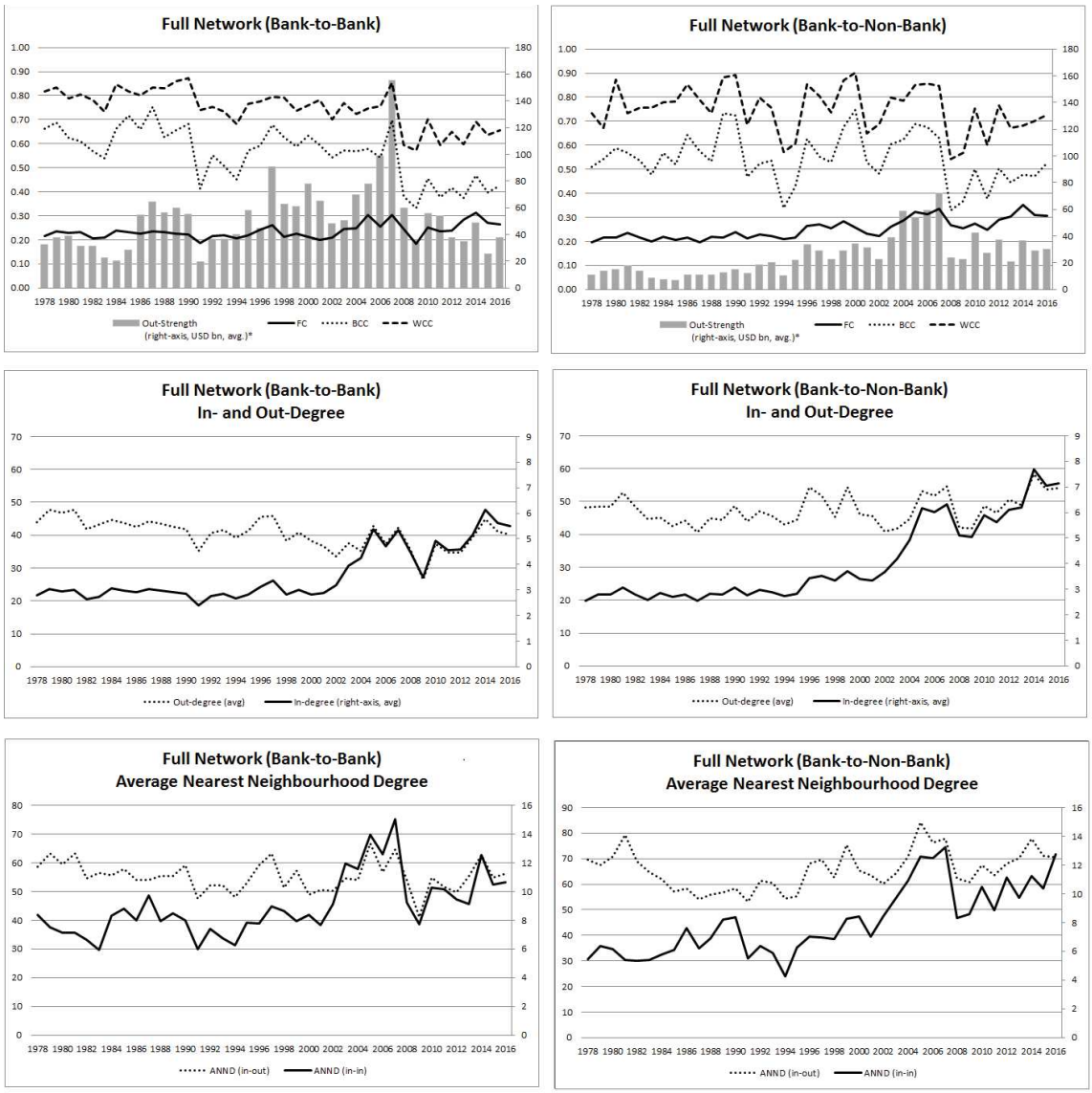

Figure 4.1: Network Statistics, 1978-2016

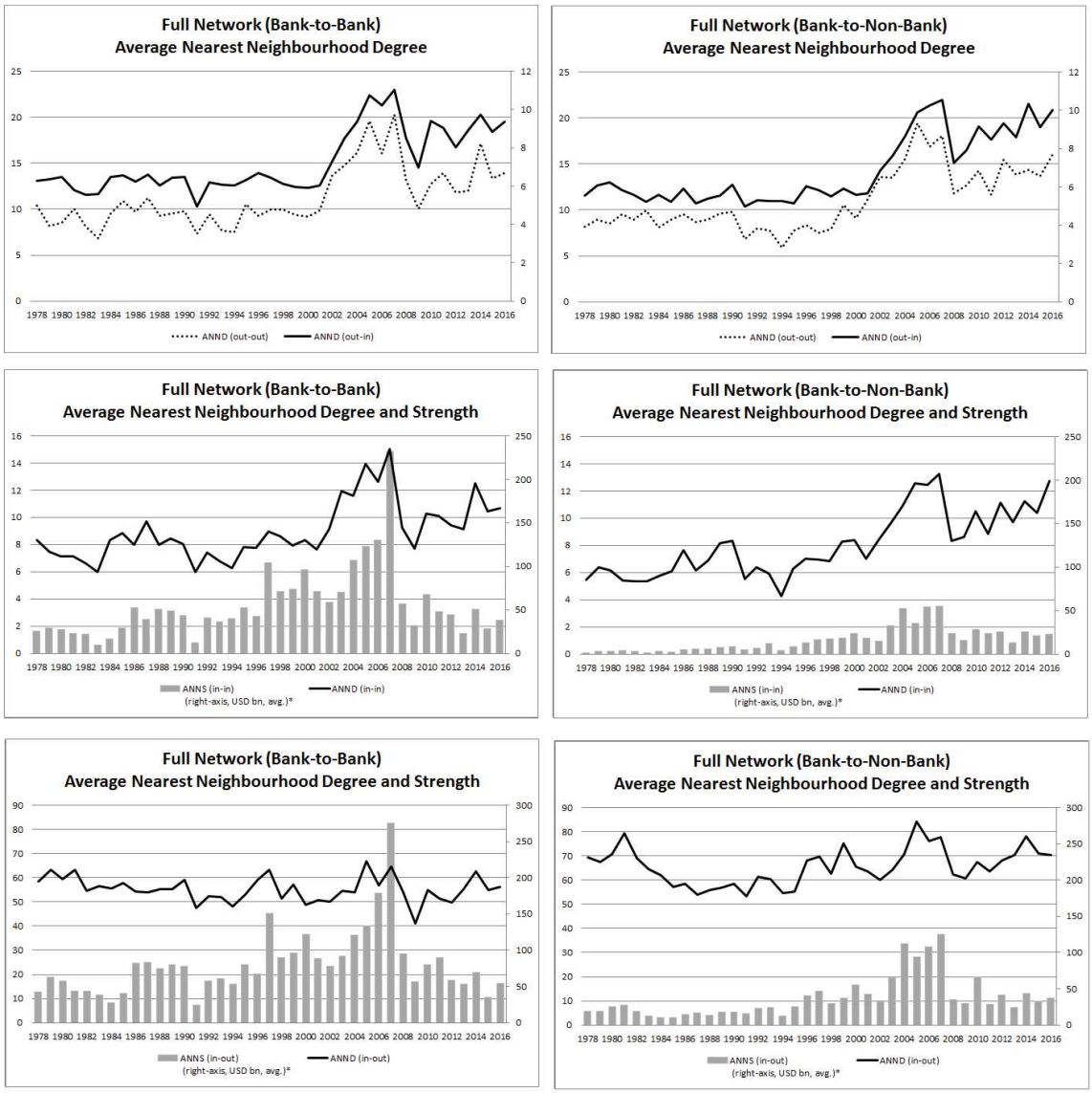

Figure 4.2: Network Statistics, 1978-2016

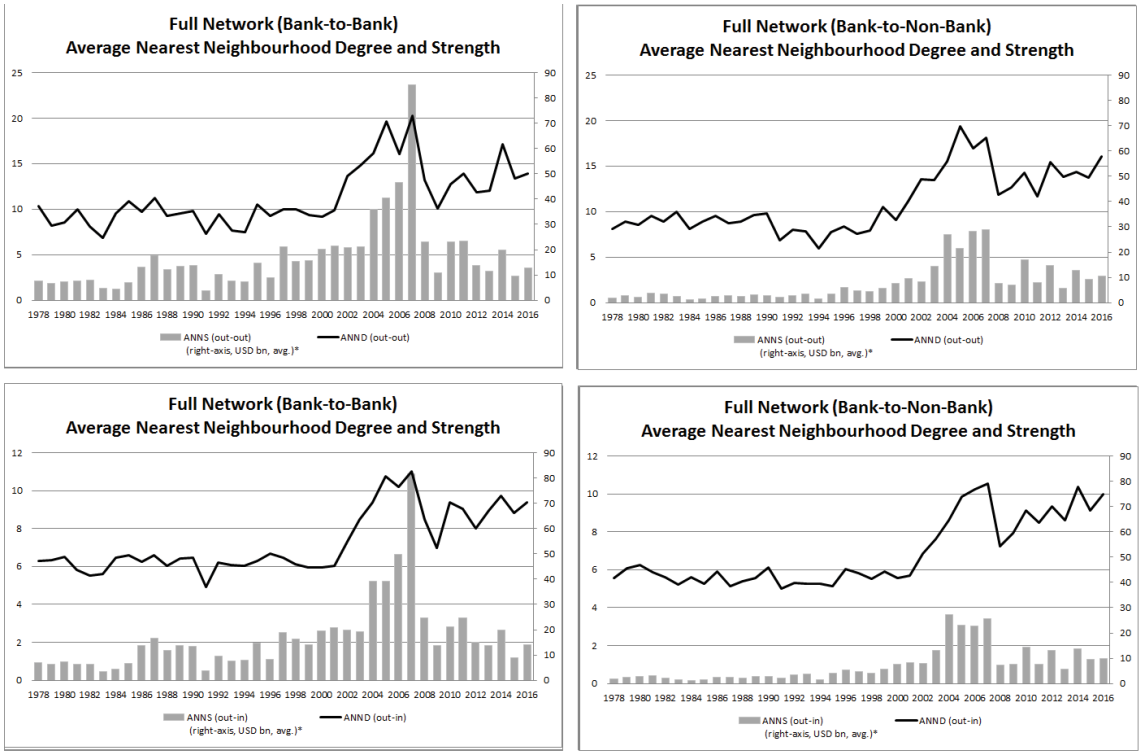

Figure 4.3: Network Statistics, 1978-2016

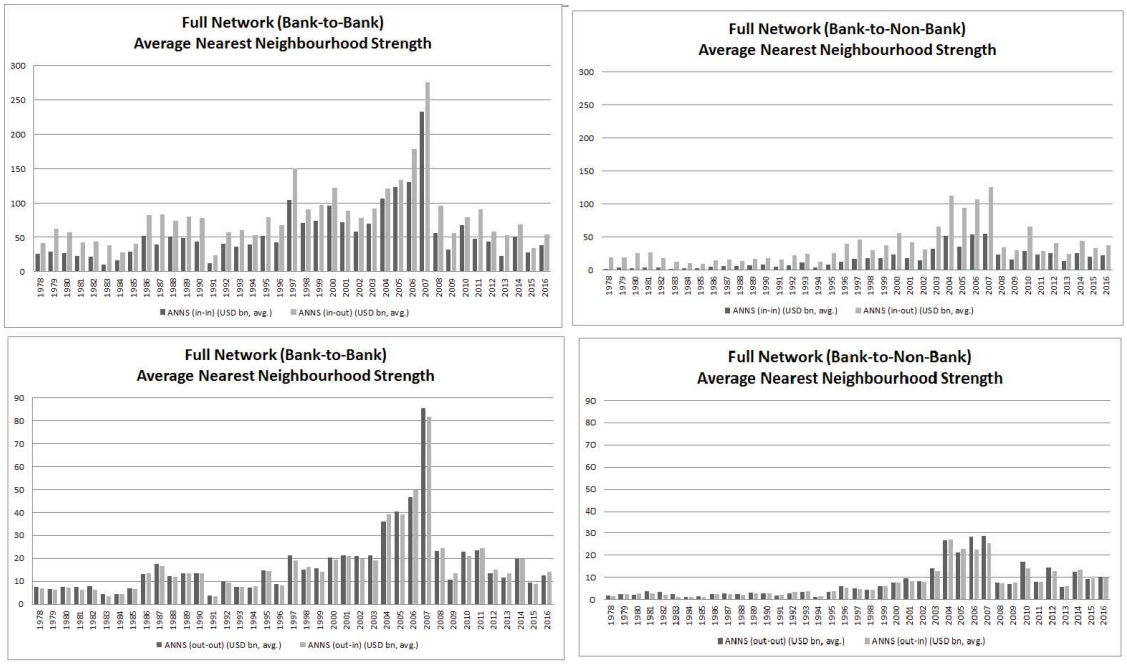

Figure 4.4: Network Statistics, 1978-2016

CHAPTER V

CONCLUSIONS

The global financial crisis has increased the interest in understanding the relationship between financial connectivity and financial stability. Theoretical and empirical literature indicates that financial stability of the system is crucially dependent on the level of connectivity among financial institutions. However, there are two conflicting arguments on this relationship. One line of literature argues that an increase in the level of financial connectivity enhances financial stability by allowing financial institutions to share the risk. Another line of literature argues that depending on the structure of the market, it can also deteriorate financial stability by facilitating the spread of a shock from one country to the other.

This thesis examines the structure of bank-to-bank and bank-to-non-bank global cross-border lending market and investigates the relationship between financial connectivity and probability of crises during normal, credit boom, and capital inflow periods and for different type of borrowers: banks and non-banks for the 1978-2016 period. We employ network analysis which is a powerful tool for modelling complex linkages across countries to understand the structure of the cross-border lending market and to measure its connectivity. Connectivity is calculated both at a global and an individual country levels. Probit model with country-fixed effects is used to test the relationship between financial connectivity and the probability of crisis.

The second chapter of this thesis shows that for 13 advanced countries, for the period of 1978-2016, an increase in financial connectivity reduces the probability of systemic crises, controlling for macroeconomic variables and other country characteristics. However, this effect is found to be mitigated or completely eliminated in credit boom and capital inflow upsurge periods in both bank-to-bank and bank-to-non-bank lending markets. In credit boom periods, an increase in the level of connectivity in bank-to-bank lending market is found to be associated with an increase in the probability of crisis whereas it does not have any impact in bank-to-non-bank lending network. In capital inflow periods, an increase in the level of connectivity is found to increase probability of crisis in both networks, but this effect is found to be limited to short-term in the bank-to-non-bank lending network. Analysis of the characteristics of both networks show that cross-border flows and connectivity decreased considerably in the year when recent GFC hit a country and that a lending shift may have occurred from banks towards non-bank sector in crisis periods. We find that bank-to-non-bank lending network is more stable both in terms of the number and the amount of lending relationships during the overall period and recovered from the recent GFC faster than bank-to-bank lending network.

In the third chapter, we examine European bank-to-bank and bank-to-non-bank cross-border lending market comprised of 25 countries, during the 1978-2016 period. Analyzing the European cross-border lending market allows us to test the effect of the level of financial integration measured by the level of financial connectivity on the probability of systemic as well as idiosyncratic crisis, as data set enables us to observe both type of crisis. We find that while using the single currency, Euro, helps to improve the resiliency of EU in response to crisis in both networks, legislative-regulatory integration across member states without eliminating currency risk damages the resiliency of the EU in bank-to-bank lending

network, only. During the excessive cross-border lending preGFC period, an increase in connectivity is found to raise the probability of crisis for both lending networks, regardless of the membership status.

In the final chapter, we analyze the global bank-to-bank and bank-to-non-bank cross-border lending market, including 177 countries, for the 1978-2016 period. We find that in bank-to-bank lending network, an increase in global financial connectivity is found to be associated with a decline in the probability of crises, but this effect is found to be eliminated in credit boom periods, only. On the other hand, an increase in local connectivity is found to be associated with an increase in the probability of crisis. In both lending markets we find that capital inflow periods do not affect the relationship between connectivity and probability of crisis. For emerging countries, though it is beneficial for them to increase their global connectivity level, increase in their local connectivity is found to be associated with an increase in the probability of crisis. Yet, emerging countries seem to benefit more from capital inflows in both lending markets, as their probability of crisis is found to decline during capital inflow periods.

The findings of this thesis have several policy implications. First, policy-makers should closely monitor cross-border flows because an increase in financial connectivity is found to have benefits, as well as risks. In particular, our results suggest that for cross-border lending network of 13 advanced economies an increase in financial connectivity is associated with a decrease in the probability of crisis, but this effect is found to be eliminated during excessive liquidity periods. For global cross-border lending network this effect is observed only for credit boom periods in bank-to-bank lending network. Second, it is observed that the type of the borrower (i.e. bank or non-bank) plays an important role in maintaining financial stability benefits of an increase in financial connectivity. The results suggest that cross-border lending to banks has a higher potential to disturb

financial stability compared to the non-bank sector lending, especially in credit boom periods for both core to core and global lending networks. Hence, policy-makers may reduce risks associated with cross-border lending by enforcing policies that encourage transfer of cross-border flows to the real economy rather than banking sector during excessive liquidity periods. Third, increasing local connectivity level that's concentrating on few borrowers/lenders is found to be associated with an increase in the probability of crisis. This effect seems to be driven mainly by emerging countries. So, a policy-maker should monitor risk concentration of lenders which lend to emerging countries and borrowers who are themselves are emerging ones. Setting target concentration ratios for global lenders and heavily debted borrowers may ensure the risk diversification. Finally, EU seem to benefit from deeper integration of its institutions towards financial union as single currency integration is shown to improve the resiliency. Hence, policy-makers should focus on deeper integration of EU, but excessive lending periods have to be taken with caution, as an increase in connectivity is found to increase the probability of crisis, regardless of the membership status. All in all, for policy-makers our results suggest designing a financial market mechanism that can reduce risks associated with an increase in financial connectivity, while maintaining its benefits. This would contribute to the resiliency of the global financial system.

There are few limitations in this research. For example, cross-border flows between non-reporting periphery countries are missing from our dataset. This implies that some of our network measures will underestimate the true exposures and connectedness. Besides, cross-border exposures of some of the core countries (Spain, Italy, Austria and non-banking exposures of Germany) are not publicly available, so they are not included within our dataset. Another limitation is that in estimating cross-border exposures, we observe only net flows. Analyzing payments (i.e. negative flows) may show interesting patterns in cross-border flows.

Future work could expand our analysis by investigating how the relationship between financial connectivity and stability changes in response to different shock sizes, as Acemoglu et al. (2015) argues. Such work is important as it highlights when financial connectivity serves to improve financial stability. Moreover, this study examines only the linear relationship between financial connectivity and stability. Examining non-linear patterns may provide interesting results.

REFERENCES

Acemoglu, D., Ozdaglar, A., and Tahbaz-Salehi, A. (2015). Systemic risk and stability in financial networks. *American Economic Review*, 105(2):564–608.

Aiyar, S., Calomiris, C. W., Hooley, J., Korniyenko, Y., and Wieladek, T. (2014). The international transmission of bank capital requirements: Evidence from the UK. *Journal of Financial Economics*, 113(3):368 – 382.

Allen, F. and Babus, A. (2009). *In: Kleindorfer, P., Wind, J. (Eds.), Network-based Strategies and Competencies*, chapter Networks in finance, pages 367—-382. Wharton School Publishing, Upper Saddle River, NJ.

Allen, F., Babus, A., and Carletti, E. (2009). Financial Crises: Theory and Evidence. *Annual Review of Financial Economics*, 1:97–116.

Allen, F., Babus, A., and Carletti, E. (2012). Asset commonality, debt maturity and systemic risk. *Journal of Financial Economics*, 104(3):519 – 534.

Allen, F., Beck, T., Carletti, E., Lane, P., Schoenmaker, D., and Wagner, W. (2011). *Cross-border Banking in Europe: Implications for Financial Stability and Macroeconomic Policies*. Centre for Economic Policy Research.

Allen, F. and Gale, D. (2000). Financial Contagion. *The Journal of Political Economy*, 108(1):1–33.

Amiti, M., McGuire, P., and Weinstein, D. E. (2019). International Bank Flows and the Global Financial Cycle. *IMF Economic Review*, 67(1):61–108.

Avdjiev, S., Binder, S., and Sousa, R. (2018). External debt composition and domestic credit cycles. Working Papers 28, European Stability Mechanism.

Battiston, S., Delli Gatti, D., Gallegati, M., Greenwald, B., and Stiglitz, J. E. (2012a). Liaisons dangereuses: Increasing connectivity, risk sharing, and systemic risk. *Journal of Economic Dynamics and Control*, 36(8):1121–1141.

Battiston, S., Gatti, D. D., Gallegati, M., Greenwald, B., and Stiglitz, J. E. (2012b). Default cascades: When does risk diversification increase stability? *Journal of Financial Stability*, 8(3):138–149.

Billio, M., Getmansky, M., Lo, A. W., and Pelizzon, L. (2012). Econometric measures of connectedness and systemic risk in the finance and insurance sectors. *Journal of Financial Economics*, 104(3):535–559.

Blank, S. and Buch, C. (2007). The euro and cross-border banking: Evidence from bilateral data. *Comparative Economic Studies*, 49(3):389–410.

Bongini, P., Clemente, G. P., and Grassi, R. (2018). Interconnectedness, G-SIBs and network dynamics of global banking. *Finance Research Letters*, 27(C):185–192.

Brusco, S. and Castiglionesi, F. (2007). Liquidity coinsurance, moral hazard, and financial contagion. *The Journal of Finance*, 62(5):2275–2302.

Caballero, J. (2015). Banking crises and financial integration: Insights from networks science. *Journal of International Financial Markets, Institutions and Money*, 34:127 – 146.

Caballero, J. A. (2014). Do surges in international capital inflows influence the likelihood of banking crises? *The Economic Journal*, 126(591):281–316.

Caballero, R. J. and Simsek, A. (2013). Fire sales in a model of complexity. *The Journal of Finance*, 68(6):2549–2587.

Caccioli, F., Shrestha, M., Moore, C., and Farmer, J. D. (2014). Stability analysis of financial contagion due to overlapping portfolios. *Journal of Banking and Finance*, 46(1):233–245.

Chevallier, J., Nguyen, D. K., Siverskog, J., and Uddin, G. S. (2018). Market integration and financial linkages among stock markets in pacific basin countries.

Journal of Empirical Finance, 46:77 – 92.

Chinazzi, M. and Fagiolo, G. (2013). Systemic Risk, Contagion, and Financial Networks: A Survey. *Contagion, and Financial Networks: A Survey (April 2, 2013)*, pages 1–57.

Chinazzi, M., Fagiolo, G., Reyes, J. A., and Schiavo, S. (2013). Post-mortem examination of the international financial network. *Journal of Economic Dynamics and Control*, 37(8):1692–1713.

Cihak, M., Munoz, S., and Scuzzarella, R. (2012). The Bright and the Dark Side of Cross-Border Banking Linkages. *Czech Journal of Economics and Finance (Finance a uver)*, 62(3):200–225.

Clemente, G. and Grassi, R. (2018). Directed clustering in weighted networks: A new perspective. *Chaos, Solitons & Fractals*, 107:26 – 38.

Coeurdacier, N. and Martin, P. (2009). The geography of asset trade and the euro: Insiders and outsiders. *Journal of the Japanese and International Economies*, 23(2):90–113.

Dasgupta, A. (2004). Financial contagion through capital connections: A model of the origin and spread of bank panics. *Journal of the European Economic Association*, 2(6):1049–1084.

De Santis, R. A. and Gérard, B. (2006). Financial integration, international portfolio choice and the European Monetary Union. Working Paper Series 626, European Central Bank.

Degryse, H. and Nguyen, G. (2007). Interbank Exposures: an Empirical Examination of Systemic Risk in The Belgian Banking System. *International Journal of Central Banking*, 3(2):123–171.

Demir, M. and Önder, Z. (2019). Financial connectivity and excessive liquidity: Benefit or risk? *Journal of International Financial Markets, Institutions and Money*, 62(C):203–221.

Demirguc-Kunt, A. and Detragiache, E. (1998). The Determinants of Banking Crises in Developing and Developed Countries.

Demirgüç-Kunt, A. and Detragiache, E. (2005). Cross-country empirical studies of systemic bank distress: a survey. *National Institute Economic Review*, 192(1):68–83.

Diamond, D. W. and Dybvig, P. H. (1983). Bank Runs , Deposit Insurance , and Liquidity Author (s): Douglas W . Diamond and Philip H . Dybvig Source : Journal of Political Economy , Vol . 91 , No . 3 (Jun ., 1983), pp . 401-419 Published by : The University of Chicago Press Stable URL : http:. *Journal of Political Economy*, 91(3):401–419.

Diebold, F. X. and Yilmaz, K. (2009). Measuring Financial Asset Return and Volatility Spillovers, with Application to Global Equity Markets. *The Economic Journal*, 119(534):158–171.

Diebold, F. X. and Yılmaz, K. (2014). On the network topology of variance decompositions: Measuring the connectedness of financial firms. *Journal of Econometrics*, 182(1):119 – 134.

Dungey, M., Harvey, J., and Volkov, V. (2018). The changing international network of sovereign debt and financial institutions. *Journal of International Financial Markets, Institutions and Money*.

Elliott, M., Golub, B., and Jackson, M. O. (2014). Financial networks and contagion. *American Economic Review*, 104(10):3115–3153.

Fielding, D. and Rewilak, J. (2015). Credit booms, financial fragility and banking crises. *Economics Letters*, 136:233 – 236.

Furfine, C. H. (2003). Interbank Exposures: Quantifying the Risk of Contagion. *Journal of Money, Credit and Banking*, 35(1):pp. 111–128.

Gai, P. and Kapadia, S. (2010). Contagion in financial networks. *Proceedings of the Royal Society A*, (466):2401–2423.

Giannetti, M. and Laeven, L. (2012). Flight home, flight abroad, and international credit cycles. *American Economic Review*, 102(3):219–24.

Hale, G. (2012). Bank relationships, business cycles, and financial crises. *Journal of International Economics*, 88(2):312–325.

Hattori, M. and Suda, Y. (2007). Developments in a cross-border bank exposure "network". *Bank of Japan Working Paper*, 29:20.

Iyer, R. and Peydro, J. L. (2011). Interbank contagion at work: Evidence from a natural experiment. *Review of Financial Studies*, 24(4):1337–1377.

Jordà, Schularick, M., and Taylor, A. M. (2011). Financial Crises, Credit Booms, and External Imbalances: 140 Years of Lessons. *IMF Economic Review*, 59(2):340–378.

Kalemli-Ozcan, S., Papaioannou, E., and Peydro, J. L. (2013). Financial Regulation, Financial Globalization, and the Synchronization of Economic Activity. *Journal of Finance*, 68(3):1179–1228.

Kalemli-Ozcan, S., Papaioannou, E., and Peydró, J.-L. (2010). What lies beneath the euro's effect on financial integration? currency risk, legal harmonization, or trade? *Journal of International Economics*, 81(1):75 – 88.

Kauko, K. (2012). External deficits and non-performing loans in the recent financial crisis. *Economics Letters*, 115(2):196 – 199.

Kubelec, C. and Sá, F. (2012). The geographical composition of national external balance sheets: 1980-2005. *International Journal of Central Banking*, 8(2):143–189.

Laeven, L. and Valencia, F. (2013). Systemic Banking Crises Database. *IMF Economic Review*, 61(2):225–270.

Laeven, L. and Valencia, F. (2018). Systemic Banking Crises Revisited. IMF Working Papers 18/206, International Monetary Fund.

Lane, P. and Milesi-Ferretti, G. M. (2008). International investment patterns. *The*

Review of Economics and Statistics, 90(3):538–549.

Lane, P. R. (2006). Global Bond Portfolios and EMU. *International Journal of Central Banking*, 2(2):1–23.

Levy-Carciente, S., Kenett, D. Y., Avakian, A., Stanley, H. E., and Havlin, S. (2015). Dynamical macroprudential stress testing using network theory. *Journal of Banking and Finance*, 59:164–181.

Lo Duca, M., Koban, A., Basten, M., Bengtsson, E., Klaus, B., Kusmierczyk, P., Lang, J. H., Detken, C., and Peltonen, T. A. (2017). A new database for financial crises in European countries. Occasional Paper Series 194, European Central Bank.

Luna, P. G. and Hardy, B. (2019). Non-Bank Counterparties in International Banking. *BIS Quarterly Review*, (September 2019).

Martinez, R. (2015). International banking flows and credit booms : Do booms go with the flow ? *George Washington University, manuscript*.

McGuire, P. and Wooldridge, P. (2005). The bis consolidated banking statistics: structure, uses and recent enhancements. *BIS Quarterly Review*.

Minoiu, C., Kang, C., Subrahmanian, V., and Berea, A. (2015). Does financial connectedness predict crises? *Quantitative Finance*, 15(4):607–624.

Minoiu, C. and Reyes, J. A. (2013). A network analysis of global banking: 1978-2010. *Journal of Financial Stability*, 9(2):168–184.

Mistrulli, P. E. (2011). Assessing financial contagion in the interbank market: Maximum entropy versus observed interbank lending patterns. *Journal of Banking and Finance*, 35(5):1114 – 1127.

Nier, E., Yang, J., Yorulmazer, T., and Alentorn, A. (2007). Network models and financial stability. *Journal of Economic Dynamics and Control*, 31(6):2033 – 2060.

Paltalidis, N., Gounopoulos, D., Kizys, R., and Koutelidakis, Y. (2015). Transmis-

sion channels of systemic risk and contagion in the European financial network. *Journal of Banking and Finance*, 61(1):S36–S52.

Reinhart, C. M. and Reinhart, V. R. (2008). Capital flow bonanzas: An encompassing view of the past and present. Working Paper 14321, National Bureau of Economic Research.

Sander, H., Kleimeier, S., and Heuchemer, S. (2013). E(m)u effects in global cross-border banking. *Economics Letters*, 118(1):91 – 93.

Schularick, M. and Taylor, A. M. (2012). Credit Booms Gone Bust: Monetary Policy, Leverage Cycles, and Financial Crises, 1870-2008. *American Economic Review*, 102(2):1029–1061.

Sensoy, A., Nguyen, D. K., Rostom, A., and Hacihasanoglu, E. (2018). Dynamic integration and network structure of the EMU sovereign bond markets. *Annals of Operations Research*, pages 1–18.

Spiegel, M. M. (2009a). Monetary and financial integration: Evidence from the EMU. *Journal of the Japanese and International Economies*, 23(2):114–130.

Spiegel, M. M. (2009b). Monetary and Financial Integration in the EMU: Push or Pull? *Review of International Economics*, 17(4):751–776.

Tabak, B. M., Takami, M., Rocha, J. M., Cajueiro, D. O., and Souza, S. R. (2014). Directed clustering coefficient as a measure of systemic risk in complex banking networks. *Physica A: Statistical Mechanics and its Applications*, 394:211 – 216.

Tonzer, L. (2015). Cross-border interbank networks, banking risk and contagion. *Journal of Financial Stability*, 18:19 – 32.

Upper, C. and Worms, A. (2004). Estimating bilateral exposures in the German interbank market: Is there a danger of contagion? *European Economic Review*, 48(4):827–849.

Wells, S. J. (2004). Financial Interlinkages in the United Kingdom's Interbank Market and the Risk of Contagion. *Bank of England Working paper*, (230):39.

APPENDIX A: Data Description and Descriptive Statistics

Table A.1: Data description

Variable	**Definition**	**Data Source**
Dependent variable	Dummy variable taking value 1 for systemic crisis, 0 otherwise.	Lo Duca et. al. (2017) and Laeven, Valencia (2013)
FC	Financial connectivity (network density)	BIS
BCC	Binary clustering coefficient	BIS
WCC	Weighted clustering coefficient	BIS
Credit Boom	Dummy variable, taking value 1 for credit boom periods, 0 otherwise.	World Bank and authors' own estimations
Capital Inflow	Dummy variable, taking value 1 for capital inflow periods, 0 otherwise.	Reinhart and Reinhart (2009) World Bank and authors' own estimations
GDP per capita	GDP per capita (constant 2010 USD)	World Bank
PrivCredit/GDP	Loans provided to the private sector by domestic money banks as a share of GDP.	World Bank
HHI	Hirschman-Herfindahl Banking Sector Concentration Index	BIS and authors' own estimations
CAB	Ratio of current account balance to GDP	World Bank
REER	Real effective exchange rate	World Bank
M3/GDP	Ratio of liquid liabilities (M3 money) to GDP	World Bank
Unemployment	Unemployment rate	World Bank

Table A.2: Descriptive statistics

	Bank-to-Bank Lending			**Bank-to-Non-Bank Lending**		
Variable	**Mean**	**Median**	**St. Dev.**	**Mean**	**Median**	**St. Dev.**
Dependent variable	0.28	0.00	0.45	0.28	0.00	0.45
FC	0.58	0.59	0.11	0.54	0.53	0.09
BCC	0.60	0.62	0.12	0.57	0.60	0.11
WCC	0.81	0.83	0.11	0.81	0.81	0.10
Credit Boom	0.10	0.00	0.30	0.10	0.00	0.30
Capital Inflow	0.13	0.00	0.34	0.13	0.00	0.34
GDPpercapita†	43.77	41.04	16.82	43.77	41.04	16.82
PrivCredit/GDP	88.11	84.80	41.60	88.11	84.80	41.60
HHI	0.37	0.32	0.18	0.39	0.35	0.17
CAB	1.91	1.76	4.23	1.91	1.76	4.23
REER	102.45	100.07	11.97	102.45	100.07	11.97
M3/GDP	94.61	70.32	62.72	94.61	70.32	62.72
Unemployment	6.67	6.30	3.43	6.67	6.30	3.43

Notes:† Expressed in terms of constant 2010 thousand USD.

Network Measures

This technical appendix follows from Minoiu et al. (2015).

In a weighted and directed network $G(V, E, w)$, V denote the set of nodes (countries) in the network and $v \in V$ denote a specific node within that set. Nodes are connected by links (cross-border lending relationships among countries) such that $E \subseteq V \times V$ and $(v, v') \in E$ if there is a link extending from node v to node v'. Each link is associated with a weight (normalized credit flows across any two countries) such that $w : E \to [0, 1]$. Adjacent nodes (creditors and debtors) of a node v (country of interest) are given by $N_v = N_v^{in} \cup N_v^{out}$ where $N_v^{in} = \{v' \mid w(v', v) > 0\}$ (i.e. set of creditors) and $N_v^{out} = \{v' \mid w(v, v') > 0\}$ (i.e. set of debtors). Existence of a link (v, v') (i.e. lending relationships across any two countries) is represented by $b_{v,v'} = 1$ if $w(v, v') > 0$ and 0; otherwise.

Network Density (Financial Connectivity, FC): It is the number of links observed in the network divided by the total possible number of links. It measures the probability of a connection between two countries in the network and shows how close the network to a complete network, and ranges between 0 and 1.

$$FC = \frac{|E|}{|V| \times (|V| - 1)}$$

Binary Clustering Coefficient (BCC): It is the ratio of the number of triangle pattern relationships that the node actually forms to the total possible number of the triangle pattern relationships that the node can form. It expresses the likelihood that any two adjacent nodes of a country are also adjecent among themselves.

$$BCC(v) = \frac{\sum_{v', v'' \in N_v} b(v', v'')}{|N_v| \times (|N_v| - 1)}$$

Weighted Clustering Coefficient (WCC): It is the ratio of the number of triangle pattern relationships that the node actually forms to the total possible number of

the triangle pattern relationships that the node can form, weighted by the size of the flows on a triangle.

$$WCC(v) = \frac{\sum_{v',v''\in N_v} w(v',v'')}{|N_v|\times(|N_v|-1)}$$

In- and Out-Degree: d_v^{in} represents the total number of node's creditors, d_v^{out} represents the total number of node's debtors.

$$d_v^{in} = \sum_{v'\in V} b_{v',v}$$

$$d_v^{out} = \sum_{v'\in V} b_{v,v'}$$

In- and Out-Strength: $str^{in}(v)$ refers to the total amount of cross-border flows that a country borrows (node's liabilities) and $str^{out}(v)$ refers to the total amount of flows that a country lends (a node's assets). Strength measures capture the intensity of financial relationships among countries.

$$str^{in}(v) = \sum_{(v',v)\in E} w(v',v)$$

$$str^{out}(v) = \sum_{(v,v')\in E} w(v,v')$$

Average Nearest Node Degree (ANND): ANND denotes the average in- (out-) degree of adjacent nodes connected towards (from) a node v. It shows how many creditors/debtors have, on average, country v's creditors/debtors have.

$$ANND^{in,in}(v) = \frac{\sum_{(v',v)\in E} d_{v'}^{in}}{d_v^{in}}$$

$$ANND^{out,in}(v) = \frac{\sum_{(v',v)\in E} d_{v'}^{out}}{d_v^{in}}$$

$$ANND^{in,out}(v) = \frac{\sum_{(v,v')\in E} d^{in}_{v'}}{d^{out}_v}$$

$$ANND^{out,out}(v) = \frac{\sum_{(v,v')\in E} d^{out}_{v'}}{d^{out}_v}$$

Average Nearest Node Strength (ANNS): ANNS denotes the average in- (out-) strength of adjacent nodes connected to (from) a node v. It shows, on average, the overall amount of cross-border flows that country v's creditors/debtors have.

$$ANNS^{in,in}(v) = \frac{\sum_{(v',v)\in E} str^{in}(v')}{d^{in}_v}$$

$$ANNS^{out,in}(v) = \frac{\sum_{(v',v)\in E} str^{out}(v')}{d^{in}_v}$$

$$ANNS^{in,out}(v) = \frac{\sum_{(v,v')\in E} str^{in}(v')}{d^{out}_v}$$

$$ANNS^{out,out}(v) = \frac{\sum_{(v,v')\in E} str^{out}(v')}{d^{out}_v}$$

Herfindahl-Hirschman Concentration Index (HHI): For each borrower country, it is measured as summation of the squared value of the lenders' share in borrower country's total inflows. It measures the concentration (or diversification) of country's borrowing activities and ranges between 0 and 1. A higher value of the HHI which implies a higher concentration of borrowing is an indication of potentially higher risk associated with a particular country v.

$$HHI(v) = \sum_{v'\in N^{in}_v} \Big(\frac{\sum_{(v',v)\in E} w(v',v)}{\sum_{(v'',v)\in E} w(v'',v)}\Big)^2$$

APPENDIX B: Robustness Tests Results for Core to Core Network

Table B.1: Results of probit models for BB lending with interaction variable between credit boom periods and connectivity measures, estimated with crisis dates from Laeven and Valencia(2013)

	Bank-to-Bank Lending					
	(1)	(2)	(3)	(4)	(5)	(6)
Connectivity Measure						
$Ln(FC)$	-3.533***	-1.024**				
	(0.000)	(0.048)				
$Ln(BCC)$			-1.630***	-0.486		
			(0.000)	(0.272)		
$Ln(WCC)$					-1.562**	-0.453
					(0.023)	(0.511)
Interaction Variables						
$Ln(FC) * CreditBoom$	1.986*	0.128				
	(0.057)	(0.898)				
$Ln(BCC) * CreditBoom$			1.447*	0.914		
			(0.092)	(0.331)		
$Ln(WCC) * CreditBoom$					1.556	0.877
					(0.239)	(0.543)
Control Variables						
$CreditBoom$	2.029***	0.57	1.679***	1.080*	1.237***	0.790*
	(0.006)	-0.406	(0.005)	-0.072	(0.009)	(0.092)
$Ln(GDPpercapita)_t$	3.584***	4.626***	4.472***	5.138***	4.900***	5.263***
	(0.001)	0	(0.000)	0	(0.000)	(0.000)
$Ln(PrivCredit/GDP)_t$	0.996**	1.244***	1.031***	1.190***	1.071***	1.196***
	(0.017)	-0.002	(0.009)	-0.002	(0.006)	(0.002)
HHI_t	0.789	1.779***	1.574***	1.891***	1.748***	1.895***
	(0.203)	-0.001	(0.005)	0	(0.002)	(0.000)
HHI_{t-1}	0.585	0.533	0.925	0.858	1.086*	0.907
	(0.338)	-0.374	(0.107)	-0.13	(0.054)	(0.106)
HHI_{t-2}	0.584	0.605	0.715	0.815	0.856	0.843
	(0.333)	-0.29	(0.215)	-0.144	(0.130)	(0.129)
CAB_t	0.009	0.012	0.008	0.025	0.015	0.025
	(0.896)	-0.85	(0.901)	-0.689	(0.809)	(0.692)
CAB_{t-1}	-0.129*	-0.156**	-0.146**	-0.173***	-0.160**	-0.174***
	(0.062)	-0.015	(0.025)	-0.006	(0.012)	(0.006)
$REER_t$	0.039***	0.037***	0.036***	0.038***	0.037***	0.039***
	(0.002)	-0.003	(0.003)	-0.002	(0.003)	(0.002)
$M3/GDP_t$	0.002	-0.003	-0.001	-0.004	-0.002	-0.004
	(0.682)	-0.693	(0.874)	-0.578	(0.769)	(0.526)
$Unemp_t$	0.244***	0.236***	0.263***	0.257***	0.270***	0.263***
	(0.000)	0	(0.000)	0	(0.000)	(0.000)
Observations	427	427	427	427	427	427

p-value in parentheses
*** p<0.01, ** p<0.05, * p<0.1

Table B.2: Results of probit models for BNB lending with interaction variable between credit boom periods and connectivity measures, estimated with crisis dates from Laeven and Valencia(2013)

	Bank-to-Non-Bank Lending					
	(1)	(2)	(3)	(4)	(5)	(6)
Connectivity Measure						
$Ln(FC)$	-5.476***	-1.210*				
	(0.000)	(0.072)				
$Ln(BCC)$			-2.788***	-0.414		
			(0.000)	(0.435)		
$Ln(WCC)$					-2.967***	0.631
					(0.001)	(0.491)
Interaction Variables						
$Ln(FC) * CreditBoom$	3.743**	0.233				
	(0.020)	(0.865)				
$Ln(BCC) * CreditBoom$			1.398	-0.480		
			(0.324)	(0.708)		
$Ln(WCC) * CreditBoom$					-2.452	-3.766
					(0.414)	(0.147)
Control Variables						
$CreditBoom$	3.351***	0.492	1.541	0.047	0.036	-0.496
	(0.005)	(0.621)	(0.121)	(0.957)	(0.966)	(0.476)
$Ln(GDPpercap)_t$	3.971***	4.464***	4.453***	4.652***	4.470***	4.841***
	(0.000)	(0.000)	(0.000)	(0.000)	(0.000)	(0.000)
$Ln(PrivCredit/GDP)_t$	1.367***	1.480***	1.333***	1.468***	1.355***	1.520***
	(0.006)	(0.000)	(0.003)	(0.000)	(0.001)	(0.000)
HHI_t	1.535**	2.466***	2.362***	2.681***	2.604***	2.849***
	(0.045)	(0.000)	(0.001)	(0.000)	(0.000)	(0.000)
HHI_{t-1}	1.881**	1.704**	1.654**	2.042***	2.004***	2.220***
	(0.012)	(0.012)	(0.018)	(0.002)	(0.003)	(0.001)
HHI_{t-2}	1.431*	1.545**	1.184	1.718**	1.372*	1.946***
	(0.058)	(0.021)	(0.108)	(0.010)	(0.053)	(0.003)
CAB_t	0.046	-0.029	-0.020	-0.024	-0.010	-0.027
	(0.542)	(0.659)	(0.773)	(0.711)	(0.884)	(0.682)
CAB_{t-1}	-0.217***	-0.168**	-0.169**	-0.182***	-0.196***	-0.189***
	(0.004)	(0.012)	(0.018)	(0.006)	(0.004)	(0.004)
$REER_t$	0.045***	0.045***	0.042***	0.047***	0.043***	0.050***
	(0.001)	(0.001)	(0.002)	(0.000)	(0.001)	(0.000)
$M3/GDP_t$	-0.007	-0.007	-0.007	-0.007	-0.006	-0.008
	(0.459)	(0.336)	(0.365)	(0.321)	(0.407)	(0.278)
$Unemp_t$	0.234***	0.243***	0.264***	0.262***	0.271***	0.284***
	(0.000)	(0.000)	(0.000)	(0.000)	(0.000)	(0.000)
Observations	427	427	427	427	427	427

p-value in parentheses
*** p<0.01, ** p<0.05, * p<0.1

Table B.3: Results of probit models for BB lending with interaction variable between capital inflow periods and connectivity measures, estimated with the crisis dates from Laeven and Valencia (2013)

	Bank-to-Bank Lending					
	(1)	(2)	(3)	(4)	(5)	(6)
Connectivity Measure						
$Ln(FC)$	-3.593***	-1.301***				
	(0.000)	(0.008)				
$Ln(BCC)$			-1.697***	-0.554		
			(0.000)	(0.187)		
$Ln(WCC)$					-1.935***	-0.776
					(0.003)	(0.236)
Interaction Variables						
$Ln(FC) * CapitalInflow$	2.655***	1.240				
	(0.002)	(0.154)				
$Ln(BCC) * CapitalInflow$			2.216***	1.549*		
			(0.005)	(0.071)		
$Ln(WCC) * CapitalInflow$					4.871***	4.462**
					(0.003)	(0.022)
Control Variables						
$CapitalInflow$	1.475***	1.096**	1.121**	1.167**	0.996**	1.210***
	(0.009)	(0.029)	(0.025)	(0.015)	(0.019)	(0.004)
$Ln(GDPpercap)_t$	3.121***	4.134***	4.130***	4.648***	4.410***	4.768***
	(0.003)	(0.000)	(0.000)	(0.000)	(0.000)	(0.000)
$Ln(PrivCredit/GDP)_t$	1.211***	1.300***	1.174***	1.292***	1.221***	1.285***
	(0.006)	(0.001)	(0.004)	(0.001)	(0.002)	(0.001)
HHI_t	0.682	1.704***	1.595***	1.808***	1.760***	1.854***
	(0.279)	(0.002)	(0.004)	(0.001)	(0.002)	(0.001)
HHI_{t-1}	0.267	0.467	0.619	0.903	0.789	1.030*
	(0.664)	(0.445)	(0.281)	(0.114)	(0.160)	(0.076)
HHI_{t-2}	0.437	0.497	0.522	0.661	0.658	0.705
	(0.471)	(0.382)	(0.362)	(0.237)	(0.242)	(0.206)
CAB_t	0.041	0.017	0.038	0.029	0.044	0.022
	(0.559)	(0.796)	(0.563)	(0.650)	(0.503)	(0.728)
CAB_{t-1}	-0.179**	-0.143**	-0.189***	-0.163**	-0.194***	-0.160**
	(0.012)	(0.032)	(0.004)	(0.012)	(0.003)	(0.014)
$REER_t$	0.043***	0.035***	0.042***	0.037***	0.042***	0.037***
	(0.001)	(0.006)	(0.001)	(0.004)	(0.002)	(0.005)
$M3/GDP_t$	0.001	-0.002	-0.001	-0.004	-0.003	-0.004
	(0.873)	(0.806)	(0.869)	(0.559)	(0.675)	(0.549)
$Unemp_t$	0.234***	0.225***	0.247***	0.243***	0.260***	0.256***
	(0.000)	(0.000)	(0.000)	(0.000)	(0.000)	(0.000)
Observations	427	427	427	427	427	427

p-value in parentheses
*** p<0.01, ** p<0.05, * p<0.1

Table B.4: Results of probit models for BNB lending with interaction variable between capital inflow periods and connectivity measures, estimated with the crisis dates from Laeven and Valencia (2013)

	Bank-to-Non-Bank Lending					
	(1)	(2)	(3)	(4)	(5)	(6)
Connectivity Measure						
$Ln(FC)$	-4.778***	-1.433**				
	(0.000)	(0.027)				
$Ln(BCC)$			-2.837***	-0.571		
			(0.000)	(0.263)		
$Ln(WCC)$					-3.925***	0.055
					(0.000)	(0.951)
Interaction Variables						
$Ln(FC) * CapitalInflow$	2.321**	0.747				
	(0.028)	(0.410)				
$Ln(BCC) * CapitalInflow$			1.938**	0.265		
			(0.030)	(0.759)		
$Ln(WCC) * CapitalInflow$					4.096**	0.315
					(0.020)	(0.862)
Control Variables						
$CapitalInflow$	1.315*	0.748	0.881	0.397	0.694	0.318
	(0.062)	(0.186)	(0.117)	(0.429)	(0.126)	(0.446)
$Ln(GDPpercap)_t$	3.700***	4.092***	4.314***	4.393***	4.442***	4.602***
	(0.001)	(0.000)	(0.000)	(0.000)	(0.000)	(0.000)
$Ln(PrivCredit/GDP)_t$	1.646***	1.547***	1.545***	1.518***	1.470***	1.515***
	(0.002)	(0.000)	(0.001)	(0.000)	(0.001)	(0.000)
HHI_t	1.528**	2.324***	2.260***	2.624***	2.623***	2.754***
	(0.045)	(0.001)	(0.001)	(0.000)	(0.000)	(0.000)
HHI_{t-1}	1.791**	1.520**	1.711**	1.958***	2.041***	2.151***
	(0.013)	(0.028)	(0.015)	(0.003)	(0.003)	(0.001)
HHI_{t-2}	1.516**	1.513**	1.274*	1.684**	1.316*	1.858***
	(0.043)	(0.023)	(0.085)	(0.012)	(0.063)	(0.005)
CAB_t	0.054	-0.025	0.001	-0.019	0.016	-0.018
	(0.466)	(0.712)	(0.992)	(0.778)	(0.820)	(0.785)
CAB_{t-1}	-0.256***	-0.155**	-0.207***	-0.171**	-0.224***	-0.175***
	(0.001)	(0.025)	(0.005)	(0.012)	(0.002)	(0.009)
$REER_t$	0.050***	0.042***	0.050***	0.045***	0.050***	0.046***
	(0.001)	(0.002)	(0.001)	(0.001)	(0.000)	(0.001)
$M3/GDP_t$	-0.006	-0.006	-0.008	-0.007	-0.008	-0.008
	(0.549)	(0.390)	(0.344)	(0.356)	(0.314)	(0.307)
$Unemp_t$	0.223***	0.232***	0.256***	0.253***	0.264***	0.271***
	(0.001)	(0.000)	(0.000)	(0.000)	(0.000)	(0.000)
Observations	427	427	427	427	427	427

p-value in parentheses
*** p<0.01, ** p<0.05, * p<0.1

Table B.5: Results of probit models for BB lending with interaction variable between credit boom periods and connectivity measures, estimated with crisis dates from Laeven and Valencia(2018)

	Bank-to-Bank Lending					
	(1)	(2)	(3)	(4)	(5)	(6)
Connectivity Measure						
$Ln(FC)$	-2.124***	1.584**				
	(0.002)	(0.011)				
$Ln(BCC)$			-0.877	1.605***		
			(0.105)	(0.005)		
$Ln(WCC)$					-0.881	2.868***
					(0.266)	(0.003)
Interaction Variables						
$Ln(FC) * CreditBoom$	0.209	-0.960				
	(0.794)	(0.416)				
$Ln(BCC) * CreditBoom$			0.572	-1.209		
			(0.528)	(0.272)		
$Ln(WCC) * CreditBoom$					0.411	-2.363
					(0.765)	(0.168)
Control Variables						
$CreditBoom$	1.106	-0.018	1.489**	-0.175	1.245**	-0.014
	(0.156)	(0.981)	(0.018)	(0.794)	(0.011)	(0.979)
$Ln(GDPpercap)_t$	2.428**	4.049***	3.169***	4.013***	3.331***	4.062***
	(0.032)	(0.001)	(0.007)	(0.001)	(0.005)	(0.001)
$Ln(PrivCredit/GDP)_t$	1.214**	1.505***	1.236***	1.524***	1.280***	1.575***
	(0.012)	(0.001)	(0.007)	(0.001)	(0.005)	(0.001)
HHI_t	0.883	1.902***	1.554**	1.920***	1.622***	1.947***
	(0.195)	(0.002)	(0.013)	(0.002)	(0.009)	(0.002)
HHI_{t-1}	0.219	1.128	0.704	0.910	0.744	0.884
	(0.753)	(0.105)	(0.285)	(0.168)	(0.258)	(0.177)
HHI_{t-2}	0.575	0.887	0.675	0.716	0.723	0.745
	(0.390)	(0.179)	(0.301)	(0.272)	(0.266)	(0.259)
CAB_t	-0.137*	-0.087	-0.126*	-0.102	-0.122	-0.103
	(0.086)	(0.254)	(0.098)	(0.180)	(0.107)	(0.173)
CAB_{t-1}	-0.137*	-0.212***	-0.152**	-0.195***	-0.163**	-0.194***
	(0.077)	(0.005)	(0.039)	(0.010)	(0.026)	(0.010)
$REER_t$	0.031**	0.032**	0.031**	0.031**	0.031**	0.030**
	(0.018)	(0.021)	(0.022)	(0.027)	(0.020)	(0.032)
$M3/GDP_t$	0.000	-0.006	-0.001	-0.005	-0.001	-0.005
	(0.993)	(0.534)	(0.944)	(0.579)	(0.928)	(0.584)
$Unemp_t$	0.262***	0.299***	0.274***	0.295***	0.280***	0.294***
	(0.000)	(0.000)	(0.000)	(0.000)	(0.000)	(0.000)
Observations	427	427	427	427	427	427

p-value in parentheses
*** p<0.01, ** p<0.05, * p<0.1

Table B.6: Results of probit models for BNB lending with interaction variable between credit boom periods and connectivity measures, estimated with crisis dates from Laeven and Valencia(2018)

	Bank-to-Non-Bank Lending					
	(1)	(2)	(3)	(4)	(5)	(6)
Connectivity Measure						
$Ln(FC)$	-4.695***	0.821				
	(0.000)	(0.256)				
$Ln(BCC)$			-2.678***	1.065*		
			(0.000)	(0.084)		
$Ln(WCC)$					-4.385***	1.049
					(0.000)	(0.292)
Interaction Variables						
$Ln(FC) * CreditBoom$	0.984	-1.012				
	(0.562)	(0.497)				
$Ln(BCC) * CreditBoom$			-0.567	-1.499		
			(0.709)	(0.287)		
$Ln(WCC) * CreditBoom$					-2.189	-3.337
					(0.103)	(0.250)
Control Variables						
$CreditBoom$	1.795	-0.367	0.651	-0.602	-0.239	-0.443
	(0.159)	(0.730)	(0.544)	(0.525)	(0.794)	(0.547)
$Ln(GDPpercap)_t$	2.417**	3.195***	2.891***	3.139***	2.939***	3.053***
	(0.028)	(0.003)	(0.008)	(0.004)	(0.006)	(0.004)
$Ln(PrivCredit/GDP)_t$	1.426***	1.602***	1.441***	1.691***	1.757***	1.619***
	(0.008)	(0.001)	(0.005)	(0.000)	(0.001)	(0.001)
HHI_t	1.048	2.172***	1.622**	2.266***	2.083***	2.137***
	(0.165)	(0.001)	(0.028)	(0.001)	(0.003)	(0.001)
HHI_{t-1}	0.947	1.555**	1.039	1.542**	1.306*	1.332**
	(0.193)	(0.029)	(0.157)	(0.023)	(0.078)	(0.044)
HHI_{t-2}	-0.474	0.328	-0.748	0.442	-0.618	0.350
	(0.549)	(0.644)	(0.337)	(0.536)	(0.434)	(0.619)
CAB_t	-0.127	-0.149*	-0.186**	-0.160**	-0.208**	-0.156**
	(0.141)	(0.053)	(0.031)	(0.041)	(0.019)	(0.045)
CAB_{t-1}	-0.199**	-0.169**	-0.157**	-0.162**	-0.198**	-0.156**
	(0.016)	(0.020)	(0.050)	(0.027)	(0.015)	(0.030)
$REER_t$	0.033**	0.038***	0.034**	0.038***	0.038***	0.037***
	(0.018)	(0.008)	(0.014)	(0.008)	(0.007)	(0.008)
$M3/GDP_t$	-0.002	-0.006	-0.002	-0.007	-0.000	-0.006
	(0.787)	(0.467)	(0.849)	(0.451)	(0.977)	(0.486)
$Unemp_t$	0.242***	0.293***	0.273***	0.301***	0.312***	0.278***
	(0.001)	(0.000)	(0.000)	(0.000)	(0.000)	(0.000)
Observations	427	427	427	427	427	427

p-value in parentheses
*** p<0.01, ** p<0.05, * p<0.1

Table B.7: Results of probit models for BB lending with interaction variable between capital inflow periods and connectivity measures, estimated with the crisis dates from Laeven and Valencia (2018)

	Bank-to-Bank Lending					
	(1)	(2)	(3)	(4)	(5)	(6)
Connectivity Measure						
$Ln(FC)$	-2.697***	1.189**				
	(0.000)	(0.045)				
$Ln(BCC)$			-0.948**	1.308**		
			(0.038)	(0.017)		
$Ln(WCC)$					-1.289*	2.247**
					(0.062)	(0.014)
Interaction Variables						
$Ln(FC) * CapitalInflow$	2.390***	1.843*				
	(0.007)	(0.099)				
$Ln(BCC) * CapitalInflow$			2.003**	1.930*		
			(0.024)	(0.088)		
$Ln(WCC) * CapitalInflow$					3.704**	4.436**
					(0.016)	(0.025)
Control Variables						
$CapitalInflow$	1.498***	1.249**	1.191**	1.256**	1.248***	1.348***
	(0.007)	(0.020)	(0.020)	(0.017)	(0.008)	(0.004)
$Ln(GDPpercap)_t$	1.752*	3.632***	2.487**	3.753***	2.551**	3.882***
	(0.094)	(0.002)	(0.019)	(0.002)	(0.017)	(0.001)
$Ln(PrivCredit/GDP)_t$	1.385***	1.562***	1.421***	1.575***	1.485***	1.639***
	(0.005)	(0.001)	(0.003)	(0.001)	(0.002)	(0.001)
HHI_t	0.749	1.866***	1.599***	1.977***	1.751***	2.014***
	(0.272)	(0.003)	(0.009)	(0.001)	(0.005)	(0.001)
HHI_{t-1}	-0.004	1.122	0.467	0.892	0.542	1.076
	(0.996)	(0.119)	(0.465)	(0.193)	(0.400)	(0.122)
HHI_{t-2}	0.487	0.808	0.457	0.702	0.544	0.735
	(0.467)	(0.215)	(0.474)	(0.277)	(0.396)	(0.266)
CAB_t	-0.096	-0.081	-0.089	-0.095	-0.092	-0.100
	(0.213)	(0.292)	(0.225)	(0.213)	(0.216)	(0.184)
CAB_{t-1}	-0.181**	-0.204***	-0.187***	-0.191**	-0.191***	-0.197**
	(0.017)	(0.009)	(0.009)	(0.013)	(0.008)	(0.011)
$REER_t$	0.034**	0.033**	0.032**	0.033**	0.032**	0.032**
	(0.010)	(0.019)	(0.017)	(0.022)	(0.018)	(0.030)
$M3/GDP_t$	-0.001	-0.006	-0.000	-0.006	-0.001	-0.006
	(0.820)	(0.540)	(0.934)	(0.549)	(0.905)	(0.536)
$Unemp_t$	0.233***	0.288***	0.237***	0.294***	0.252***	0.302***
	(0.000)	(0.000)	(0.000)	(0.000)	(0.000)	(0.000)
Observations	427	427	427	427	427	427

p-value in parentheses
*** p<0.01, ** p<0.05, * p<0.1

Table B.8: Results of probit models for BNB lending with interaction variable between capital inflow periods and connectivity measures, estimated with the crisis dates from Laeven and Valencia (2018)

	Bank-to-Non-Bank Lending					
	(1)	(2)	(3)	(4)	(5)	(6)
Connectivity Measure						
$Ln(FC)$	-4.570***	0.371				
	(0.000)	(0.597)				
$Ln(BCC)$			-2.885***	0.679		
			(0.000)	(0.247)		
$Ln(WCC)$					-5.329***	0.414
					(0.000)	(0.677)
Interaction Variables						
$Ln(FC) * CapitalInflow$	2.103**	1.364				
	(0.035)	(0.163)				
$Ln(BCC) * CapitalInflow$			1.307	1.106		
			(0.132)	(0.268)		
$Ln(WCC) * CapitalInflow$					3.006	1.570
					(0.105)	(0.433)
Control Variables						
$CapitalInflow$	1.389**	0.997*	0.757	0.824	0.714	0.598
	(0.035)	(0.074)	(0.152)	(0.111)	(0.125)	(0.157)
$Ln(GDPpercap)_t$	1.926*	2.987***	2.479**	3.066***	2.593**	2.972***
	(0.065)	(0.005)	(0.017)	(0.004)	(0.011)	(0.005)
$Ln(PrivCredit/GDP)_t$	1.689***	1.591***	1.613***	1.654***	1.856***	1.608***
	(0.002)	(0.001)	(0.002)	(0.000)	(0.000)	(0.000)
HHI_t	0.967	1.994***	1.541**	2.120***	2.030***	2.031***
	(0.196)	(0.004)	(0.035)	(0.002)	(0.003)	(0.003)
HHI_{t-1}	1.005	1.275*	1.086	1.333*	1.278*	1.201*
	(0.162)	(0.083)	(0.135)	(0.056)	(0.079)	(0.075)
HHI_{t-2}	-0.157	0.320	-0.560	0.355	-0.526	0.235
	(0.839)	(0.649)	(0.458)	(0.614)	(0.483)	(0.735)
CAB_t	-0.100	-0.136*	-0.147*	-0.138*	-0.157*	-0.136*
	(0.232)	(0.080)	(0.078)	(0.079)	(0.063)	(0.077)
CAB_{t-1}	-0.239***	-0.165**	-0.185**	-0.160**	-0.218***	-0.151**
	(0.004)	(0.027)	(0.018)	(0.030)	(0.006)	(0.037)
$REER_t$	0.036**	0.037**	0.038***	0.036**	0.041***	0.035**
	(0.011)	(0.011)	(0.007)	(0.012)	(0.004)	(0.013)
$M3/GDP_t$	-0.002	-0.006	-0.002	-0.006	-0.001	-0.005
	(0.731)	(0.483)	(0.816)	(0.467)	(0.927)	(0.574)
$Unemp_t$	0.220***	0.282***	0.239***	0.295***	0.271***	0.273***
	(0.001)	(0.000)	(0.000)	(0.000)	(0.000)	(0.000)
Observations	427	427	427	427	427	427

p-value in parentheses
*** p<0.01, ** p<0.05, * p<0.1

Table B.9: Results of probit models for BB lending with interaction variable between credit boom periods and connectivity measures, estimated with the end of crisis dates from ESRB Lo Duca et al. (2017)

	Bank-to-Bank Lending					
	(1)	(2)	(3)	(4)	(5)	(6)
Connectivity Measure						
$Ln(FC)$	-1.991***	-0.294				
	(0.000)	(0.550)				
$Ln(BCC)$			-1.015**	-0.009		
			(0.013)	(0.983)		
$Ln(WCC)$					-0.946	0.289
					(0.133)	(0.670)
Interaction Variables						
$Ln(FC) * CreditBoom$	0.376	-0.659				
	(0.687)	(0.466)				
$Ln(BCC) * CreditBoom$			0.763	0.469		
			(0.350)	(0.603)		
$Ln(WCC) * CreditBoom$					0.455	0.157
					(0.718)	(0.768)
Control Variables						
$CreditBoom$	0.845	0.242	1.066**	0.883	0.728*	0.658
	(0.177)	(0.681)	(0.047)	(0.101)	(0.082)	(0.109)
$Ln(GDPpercap)_t$	2.573***	3.190***	2.923***	3.354***	3.024***	3.400***
	(0.001)	(0.000)	(0.000)	(0.000)	(0.000)	(0.000)
$Ln(PrivCredit/GDP)_t$	0.455*	0.559**	0.500*	0.537**	0.534**	0.548**
	(0.092)	(0.034)	(0.060)	(0.041)	(0.043)	(0.038)
HHI_t	0.767	1.414***	1.244**	1.486***	1.350***	1.484***
	(0.143)	(0.004)	(0.011)	(0.002)	(0.005)	(0.002)
HHI_{t-1}	-0.334	-0.293	-0.085	-0.084	0.013	-0.047
	(0.530)	(0.594)	(0.868)	(0.871)	(0.979)	(0.927)
HHI_{t-2}	-0.550	-0.465	-0.449	-0.312	-0.353	-0.291
	(0.310)	(0.385)	(0.397)	(0.551)	(0.500)	(0.577)
CAB_t	0.094	0.097	0.095	0.098	0.097	0.097
	(0.143)	(0.126)	(0.134)	(0.118)	(0.123)	(0.121)
CAB_{t-1}	-0.185***	-0.208***	-0.199***	-0.210***	-0.205***	-0.210***
	(0.003)	(0.001)	(0.001)	(0.001)	(0.001)	(0.001)
$REER_t$	0.040***	0.040***	0.038***	0.039***	0.038***	0.039***
	(0.000)	(0.000)	(0.000)	(0.000)	(0.000)	(0.000)
$M3/GDP_t$	-0.003	-0.007	-0.006	-0.008	-0.006	-0.008
	(0.581)	(0.200)	(0.293)	(0.157)	(0.257)	(0.136)
$Unemp_t$	0.265***	0.272***	0.272***	0.278***	0.272***	0.280***
	(0.000)	(0.000)	(0.000)	(0.000)	(0.000)	(0.000)
Observations	427	427	427	427	427	427

p-value in parentheses
*** p<0.01, ** p<0.05, * p<0.1

Table B.10: Results of probit models for BNB lending with interaction variable between credit boom periods and connectivity measures, estimated with the end of crisis dates from ESRB Lo Duca et al. (2017)

	Bank-to-Non-Bank Lending					
	(1)	(2)	(3)	(4)	(5)	(6)
Connectivity Measure						
$Ln(FC)$	-2.444***	0.699				
	(0.000)	(0.251)				
$Ln(BCC)$			-1.745***	-0.108		
			(0.000)	(0.820)		
$Ln(WCC)$					-1.859**	0.660
					(0.013)	(0.415)
Interaction Variables						
$Ln(FC) * CreditBoom$	0.158	-0.918				
	(0.907)	(0.455)				
$Ln(BCC) * CreditBoom$			-0.059	-0.556		
			(0.963)	(0.631)		
$Ln(WCC) * CreditBoom$					-3.529	-2.915
					(0.190)	(0.195)
Control Variables						
$CreditBoom$	0.746	-0.013	0.578	0.225	-0.224	-0.071
	(0.448)	(0.988)	(0.502)	(0.766)	(0.760)	(0.902)
$Ln(GDPpercap)_t$	2.568***	2.993***	2.696***	2.827***	2.773***	2.891***
	(0.001)	(0.000)	(0.000)	(0.000)	(0.000)	(0.000)
$Ln(PrivCredit/GDP)_t$	0.549*	0.692**	0.524*	0.684**	0.605**	0.722**
	(0.054)	(0.014)	(0.063)	(0.015)	(0.031)	(0.011)
HHI_t	1.394**	2.399***	1.856***	2.221***	2.090***	2.300***
	(0.020)	(0.000)	(0.001)	(0.000)	(0.000)	(0.000)
HHI_{t-1}	0.614	1.232**	0.562	0.904	0.824	0.991*
	(0.272)	(0.037)	(0.317)	(0.101)	(0.134)	(0.067)
HHI_{t-2}	0.192	0.815	0.156	0.607	0.246	0.748
	(0.733)	(0.147)	(0.785)	(0.278)	(0.666)	(0.177)
CAB_t	0.114*	0.087	0.099	0.086	0.097	0.084
	(0.082)	(0.169)	(0.136)	(0.177)	(0.135)	(0.186)
CAB_{t-1}	-0.213***	-0.216***	-0.206***	-0.210***	-0.216***	-0.212***
	(0.001)	(0.001)	(0.001)	(0.001)	(0.001)	(0.001)
$REER_t$	0.044***	0.049***	0.044***	0.047***	0.045***	0.049***
	(0.000)	(0.000)	(0.000)	(0.000)	(0.000)	(0.000)
$M3/GDP_t$	-0.008	-0.011*	-0.009	-0.010*	-0.010*	-0.011*
	(0.168)	(0.054)	(0.121)	(0.070)	(0.085)	(0.061)
$Unemp_t$	0.252***	0.292***	0.258***	0.270***	0.272***	0.283***
	(0.000)	(0.000)	(0.000)	(0.000)	(0.000)	(0.000)
Observations	427	427	427	427	427	427

p-value in parentheses
*** p<0.01, ** p<0.05, * p<0.1

Table B.11: Results of probit models for BB lending with interaction variable between capital inflow periods and connectivity measures, estimated with the end of the crisis date from ESRB Lo Duca et al. (2017)

	Bank-to-Bank Lending					
	(1)	(2)	(3)	(4)	(5)	(6)
Connectivity Measure						
$Ln(FC)$	-2.596***	-0.773*				
	(0.000)	(0.094)				
$Ln(BCC)$			-1.265***	-0.093		
			(0.001)	(0.820)		
$Ln(WCC)$					-1.553**	-0.094
					(0.011)	(0.884)
Interaction Variables						
$Ln(FC) * CapitalInflow$	3.780***	2.091**				
	(0.000)	(0.013)				
$Ln(BCC) * CapitalInflow$			3.158***	2.134**		
			(0.000)	(0.018)		
$Ln(WCC) * CapitalInflow$					4.558***	3.098***
					(0.000)	(0.009)
Control Variables						
$CapitalInflow$	1.799***	1.576***	1.358***	1.512***	1.056***	1.389***
	(0.001)	(0.001)	(0.005)	(0.001)	(0.010)	(0.000)
$Ln(GDPpercap)_t$	2.517***	2.804***	2.987***	3.027***	3.043***	3.067***
	(0.002)	(0.000)	(0.000)	(0.000)	(0.000)	(0.000)
$Ln(PrivCredit/GDP)_t$	0.517*	0.605**	0.535**	0.634**	0.592**	0.635**
	(0.061)	(0.025)	(0.047)	(0.017)	(0.027)	(0.019)
HHI_t	0.706	1.315***	1.303***	1.428***	1.453***	1.438***
	(0.194)	(0.008)	(0.009)	(0.004)	(0.004)	(0.003)
HHI_{t-1}	-0.560	-0.356	-0.296	-0.065	-0.180	0.029
	(0.312)	(0.526)	(0.574)	(0.902)	(0.728)	(0.957)
HHI_{t-2}	-0.636	-0.575	-0.573	-0.408	-0.503	-0.381
	(0.253)	(0.285)	(0.285)	(0.441)	(0.343)	(0.471)
CAB_t	0.135*	0.115*	0.124*	0.108*	0.122*	0.102
	(0.051)	(0.072)	(0.063)	(0.087)	(0.065)	(0.109)
CAB_{t-1}	-0.253***	-0.199***	-0.251***	-0.199***	-0.246***	-0.192***
	(0.000)	(0.002)	(0.000)	(0.001)	(0.000)	(0.002)
$REER_t$	0.053***	0.040***	0.050***	0.040***	0.049***	0.039***
	(0.000)	(0.000)	(0.000)	(0.000)	(0.000)	(0.001)
$M3/GDP_t$	-0.004	-0.007	-0.006	-0.009	-0.007	-0.009
	(0.543)	(0.225)	(0.332)	(0.130)	(0.245)	(0.124)
$Unemp_t$	0.279***	0.258***	0.277***	0.268***	0.285***	0.273***
	(0.000)	(0.000)	(0.000)	(0.000)	(0.000)	(0.000)
Observations	427	427	427	427	427	427

p-value in parentheses
*** p<0.01, ** p<0.05, * p<0.1

Table B.12: Results of probit models for BNB lending with interaction variable between capital inflow periods and connectivity measures, estimated with the end of the crisis date from ESRB Lo Duca et al. (2017)

	Bank-to-Non-Bank Lending					
	(1)	(2)	(3)	(4)	(5)	(6)
Connectivity Measure						
$Ln(FC)$	-2.726***	0.148				
	(0.000)	(0.797)				
$Ln(BCC)$			-2.173***	-0.373		
			(0.000)	(0.414)		
$Ln(WCC)$					-2.966***	-0.056
					(0.000)	(0.943)
Interaction Variables						
$Ln(FC) * CapitalInflow$	2.995***	1.552*				
	(0.001)	(0.065)				
$Ln(BCC) * CapitalInflow$			2.970***	1.072		
			(0.000)	(0.196)		
$Ln(WCC) * CapitalInflow$					4.846***	1.815
					(0.003)	(0.288)
Control Variables						
$CapitalInflow$	1.518**	1.302**	1.316***	1.001**	0.705*	0.792**
	(0.010)	(0.011)	(0.009)	(0.029)	(0.075)	(0.032)
$Ln(GDPpercap)_t$	2.569***	2.666***	2.915***	2.576***	2.991***	2.653***
	(0.001)	(0.000)	(0.000)	(0.000)	(0.000)	(0.000)
$Ln(PrivCredit/GDP)_t$	0.590**	0.748***	0.569**	0.764***	0.609**	0.781***
	(0.039)	(0.007)	(0.046)	(0.006)	(0.030)	(0.005)
HHI_t	1.395**	2.198***	1.817***	2.126***	2.136***	2.208***
	(0.025)	(0.000)	(0.002)	(0.000)	(0.000)	(0.000)
HHI_{t-1}	0.750	0.922	0.691	0.720	0.860	0.867
	(0.184)	(0.126)	(0.229)	(0.200)	(0.123)	(0.112)
HHI_{t-2}	0.297	0.731	0.224	0.528	0.238	0.631
	(0.601)	(0.194)	(0.699)	(0.347)	(0.676)	(0.255)
CAB_t	0.133*	0.099	0.139*	0.101	0.124*	0.098
	(0.055)	(0.120)	(0.056)	(0.116)	(0.074)	(0.127)
CAB_{t-1}	-0.265***	-0.205***	-0.270***	-0.200***	-0.257***	-0.198***
	(0.000)	(0.001)	(0.000)	(0.002)	(0.000)	(0.002)
$REER_t$	0.053***	0.047***	0.056***	0.045***	0.054***	0.046***
	(0.000)	(0.000)	(0.000)	(0.000)	(0.000)	(0.000)
$M3/GDP_t$	-0.009	-0.011*	-0.010	-0.010*	-0.010*	-0.010*
	(0.137)	(0.057)	(0.114)	(0.077)	(0.084)	(0.078)
$Unemp_t$	0.258***	0.276***	0.272***	0.259***	0.274***	0.269***
	(0.000)	(0.000)	(0.000)	(0.000)	(0.000)	(0.000)
Observations	427	427	427	427	427	427

p-value in parentheses
*** p<0.01, ** p<0.05, * p<0.1

Table B.13: Results of probit models for BB lending with interaction variable between credit boom periods and connectivity measures, GFC excluded

	Bank-to-Bank Lending					
	(1)	(2)	(3)	(4)	(5)	(6)
Connectivity Measure						
$Ln(FC)$	-2.751***	-1.917***				
	(0.000)	(0.006)				
$Ln(BCC)$			-1.981***	-1.342**		
			(0.000)	(0.020)		
$Ln(WCC)$					-1.970**	-1.222
					(0.020)	(0.187)
Interaction Variables						
$Ln(FC) * CreditBoom$	3.910*	3.338**				
	(0.082)	(0.034)				
$Ln(BCC) * CreditBoom$			3.560*	3.873*		
			(0.056)	(0.062)		
$Ln(WCC) * CreditBoom$					4.089*	3.133*
					(0.054)	(0.094)
Control Variables						
$CreditBoom$	2.461**	2.575**	2.167**	1.857**	1.791**	1.243*
	(0.020)	(0.021)	(0.017)	(0.044)	(0.016)	(0.082)
$Ln(GDPpercap)_t$	5.524***	4.905***	5.581***	5.300***	5.407***	5.536***
	(0.000)	(0.000)	(0.000)	(0.000)	(0.000)	(0.000)
$Ln(PrivCredit/GDP)_t$	0.546*	0.696**	0.580*	0.601*	0.658**	0.609**
	(0.086)	(0.024)	(0.065)	(0.050)	(0.033)	(0.047)
HHI_t	1.180*	1.699***	1.638***	1.856***	1.802***	1.899***
	(0.073)	(0.006)	(0.010)	(0.003)	(0.004)	(0.002)
HHI_{t-1}	0.154	-0.006	0.080	0.375	0.297	0.514
	(0.824)	(0.993)	(0.909)	(0.578)	(0.664)	(0.444)
HHI_{t-2}	0.171	0.196	0.224	0.101	0.369	0.249
	(0.805)	(0.773)	(0.743)	(0.883)	(0.580)	(0.710)
CAB_t	0.295***	0.310***	0.278***	0.292***	0.257**	0.270***
	(0.007)	(0.004)	(0.009)	(0.005)	(0.012)	(0.008)
CAB_{t-1}	-0.449***	-0.473***	-0.450***	-0.467***	-0.433***	-0.452***
	(0.000)	(0.000)	(0.000)	(0.000)	(0.000)	(0.000)
$REER_t$	0.045***	0.035**	0.041***	0.035***	0.039***	0.035**
	(0.002)	(0.011)	(0.004)	(0.010)	(0.005)	(0.011)
$M3/GDP_t$	-0.010	-0.008	-0.012**	-0.009	-0.014**	-0.011*
	(0.114)	(0.202)	(0.049)	(0.166)	(0.022)	(0.099)
$Unemp_t$	0.416***	0.380***	0.420***	0.398***	0.400***	0.403***
	(0.000)	(0.000)	(0.000)	(0.000)	(0.000)	(0.000)
Observations	375	375	375	375	375	375

p-value in parentheses
*** p<0.01, ** p<0.05, * p<0.1

Table B.14: Results of probit models for BNB lending with interaction variable between credit boom periods and connectivity measures, GFC excluded

	Bank-to-Non-Bank Lending					
	(1)	(2)	(3)	(4)	(5)	(6)
Connectivity Measure						
$Ln(FC)$	-2.380***	-0.110				
	(0.004)	(0.885)				
$Ln(BCC)$			-1.539**	-0.974*		
			(0.011)	(0.088)		
$Ln(WCC)$					-2.851***	-1.367
					(0.005)	(0.139)
Interaction Variables						
$Ln(FC) * CreditBoom$	2.753	6.031*				
	(0.407)	(0.054)				
$Ln(BCC) * CreditBoom$			1.655	3.839		
			(0.487)	(0.111)		
$Ln(WCC) * CreditBoom$					-1.112	2.467
					(0.794)	(0.512)
Control Variables						
$CreditBoom$	2.222	3.531**	1.490	2.137*	0.398	0.691
	(0.244)	(0.042)	(0.252)	(0.078)	(0.675)	(0.354)
$Ln(GDPpercap)_t$	6.348***	6.009***	6.553***	5.926***	6.747***	5.983***
	(0.000)	(0.000)	(0.000)	(0.000)	(0.000)	(0.000)
$Ln(PrivCredit/GDP)_t$	0.595*	0.689**	0.674**	0.669**	0.682**	0.651**
	(0.060)	(0.032)	(0.037)	(0.042)	(0.034)	(0.046)
HHI_t	2.156**	2.948***	2.170***	2.972***	2.250***	2.985***
	(0.011)	(0.000)	(0.009)	(0.000)	(0.006)	(0.000)
HHI_{t-1}	1.676**	1.914**	2.033***	1.568**	2.253***	1.676**
	(0.026)	(0.017)	(0.007)	(0.035)	(0.003)	(0.020)
HHI_{t-2}	0.773	1.390*	0.867	1.071	0.726	1.196
	(0.311)	(0.070)	(0.256)	(0.155)	(0.352)	(0.108)
CAB_t	0.346***	0.340***	0.319***	0.330***	0.328***	0.336***
	(0.002)	(0.002)	(0.004)	(0.003)	(0.004)	(0.002)
CAB_{t-1}	-0.512***	-0.528***	-0.516***	-0.514***	-0.535***	-0.522***
	(0.000)	(0.000)	(0.000)	(0.000)	(0.000)	(0.000)
$REER_t$	0.051***	0.045***	0.055***	0.045***	0.056***	0.048***
	(0.000)	(0.002)	(0.000)	(0.002)	(0.000)	(0.001)
$M3/GDP_t$	-0.018***	-0.020***	-0.018***	-0.018***	-0.020***	-0.019***
	(0.005)	(0.002)	(0.004)	(0.003)	(0.002)	(0.003)
$Unemp_t$	0.448***	0.475***	0.497***	0.456***	0.515***	0.456***
	(0.000)	(0.000)	(0.000)	(0.000)	(0.000)	(0.000)
Observations	375	375	375	375	375	375

p-value in parentheses
*** p<0.01, ** p<0.05, * p<0.1

Table B.15: Results of probit models for BB lending with interaction variable between capital inflow periods and connectivity measures, GFC excluded

	Bank-to-Bank Lending					
	(1)	(2)	(3)	(4)	(5)	(6)
Connectivity Measure						
$Ln(FC)$	-2.965***	-2.285***				
	(0.000)	(0.002)				
$Ln(BCC)$			-1.960***	-1.666***		
			(0.000)	(0.008)		
$Ln(WCC)$					-2.079**	-1.665*
					(0.019)	(0.093)
Interaction Variables						
$Ln(FC) * CapitalInflow$	3.401**	3.613***				
	(0.014)	(0.009)				
$Ln(BCC) * CapitalInflow$			1.869	2.599**		
			(0.121)	(0.023)		
$Ln(WCC) * CapitalInflow$					3.196	3.800*
					(0.102)	(0.055)
Control Variables						
$CapitalInflow$	1.429*	2.110**	0.523	1.521**	0.200	0.911*
	(0.080)	(0.010)	(0.465)	(0.029)	(0.704)	(0.082)
$Ln(GDPpercap)_t$	5.500***	4.941***	5.691***	5.137***	5.598***	5.333***
	(0.000)	(0.000)	(0.000)	(0.000)	(0.000)	(0.000)
$Ln(PrivCredit/GDP)_t$	0.605*	0.601*	0.551*	0.626**	0.622**	0.635**
	(0.050)	(0.055)	(0.069)	(0.042)	(0.038)	(0.039)
HHI_t	1.197*	1.700***	1.561**	1.790***	1.730***	1.848***
	(0.068)	(0.006)	(0.014)	(0.003)	(0.006)	(0.002)
HHI_{t-1}	0.050	0.041	-0.034	0.365	0.153	0.539
	(0.940)	(0.955)	(0.960)	(0.593)	(0.817)	(0.431)
HHI_{t-2}	-0.074	0.013	0.062	-0.048	0.233	0.142
	(0.915)	(0.984)	(0.926)	(0.944)	(0.723)	(0.831)
CAB_t	0.288***	0.297***	0.263**	0.302***	0.256**	0.272***
	(0.009)	(0.005)	(0.013)	(0.004)	(0.013)	(0.008)
CAB_{t-1}	-0.474***	-0.451***	-0.462***	-0.459***	-0.456***	-0.437***
	(0.000)	(0.000)	(0.000)	(0.000)	(0.000)	(0.000)
$REER_t$	0.049***	0.035**	0.044***	0.035**	0.042***	0.033**
	(0.001)	(0.011)	(0.002)	(0.011)	(0.002)	(0.018)
$M3/GDP_t$	-0.012*	-0.008	-0.012*	-0.009	-0.013**	-0.011*
	(0.086)	(0.187)	(0.071)	(0.165)	(0.046)	(0.077)
$Unemp_t$	0.417***	0.389***	0.420***	0.399***	0.407***	0.400***
	(0.000)	(0.000)	(0.000)	(0.000)	(0.000)	(0.000)
Observations	375	375	375	375	375	375

p-value in parentheses
*** p<0.01, ** p<0.05, * p<0.1

Table B.16: Results of probit models for BNB lending with interaction variable between capital inflow periods and connectivity measures, GFC excluded

	Bank-to-Non-Bank Lending					
	(1)	(2)	(3)	(4)	(5)	(6)
Connectivity Measure						
$Ln(FC)$	-2.551***	-0.660				
	(0.003)	(0.427)				
$Ln(BCC)$			-1.350**	-1.349**		
			(0.028)	(0.030)		
$Ln(WCC)$					-2.677**	-2.011**
					(0.011)	(0.046)
Interaction Variables						
$Ln(FC) * CapitalInflow$	2.773	3.411**				
	(0.138)	(0.025)				
$Ln(BCC) * CapitalInflow$			1.108	3.258**		
			(0.560)	(0.024)		
$Ln(WCC) * CapitalInflow$					0.682	4.353*
					(0.819)	(0.070)
Control Variables						
$CapitalInflow$	1.260	2.162**	0.175	1.850**	-0.234	0.928*
	(0.286)	(0.027)	(0.867)	(0.026)	(0.713)	(0.087)
$Ln(GDPpercap)_t$	6.170***	5.777***	6.315***	5.830***	6.402***	5.900***
	(0.000)	(0.000)	(0.000)	(0.000)	(0.000)	(0.000)
$Ln(PrivCredit/GDP)_t$	0.654**	0.734**	0.735**	0.802**	0.762**	0.765**
	(0.034)	(0.022)	(0.019)	(0.011)	(0.015)	(0.014)
HHI_t	2.217***	2.899***	2.183***	3.125***	2.276***	3.132***
	(0.009)	(0.000)	(0.009)	(0.000)	(0.005)	(0.000)
HHI_{t-1}	1.475**	1.669**	1.879**	1.381*	2.020***	1.580**
	(0.046)	(0.037)	(0.012)	(0.064)	(0.007)	(0.028)
HHI_{t-2}	0.832	1.389*	1.028	1.087	0.863	1.142
	(0.272)	(0.072)	(0.177)	(0.152)	(0.264)	(0.126)
CAB_t	0.324***	0.328***	0.289**	0.333***	0.309***	0.344***
	(0.005)	(0.003)	(0.010)	(0.003)	(0.007)	(0.002)
CAB_{t-1}	-0.521***	-0.505***	-0.514***	-0.506***	-0.537***	-0.522***
	(0.000)	(0.000)	(0.000)	(0.000)	(0.000)	(0.000)
$REER_t$	0.054***	0.044***	0.056***	0.047***	0.057***	0.049***
	(0.000)	(0.003)	(0.000)	(0.001)	(0.000)	(0.001)
$M3/GDP_t$	-0.019***	-0.020***	-0.019***	-0.019***	-0.021***	-0.018***
	(0.003)	(0.002)	(0.003)	(0.003)	(0.002)	(0.005)
$Unemp_t$	0.438***	0.465***	0.477***	0.459***	0.486***	0.461***
	(0.000)	(0.000)	(0.000)	(0.000)	(0.000)	(0.000)
Observations	375	375	375	375	375	375

p-value in parentheses
*** p<0.01, ** p<0.05, * p<0.1

Table B.17: Results of probit models for BB lending with interaction variable between credit boom periods and connectivity measures, Luxembourg excluded

	Bank-to-Bank Lending					
	(1)	(2)	(3)	(4)	(5)	(6)
Connectivity Measure						
$Ln(FC)$	-3.182***	-1.657***				
	(0.000)	(0.004)				
$Ln(BCC)$			-2.608***	-1.195**		
			(0.000)	(0.021)		
$Ln(WCC)$					-3.568***	-1.229
					(0.000)	(0.133)
Interaction Variables						
$Ln(FC) * CreditBoom$	2.451**	0.892				
	(0.032)	(0.426)				
$Ln(BCC) * CreditBoom$			3.116***	2.143*		
			(0.005)	(0.089)		
$Ln(WCC) * CreditBoom$					4.034**	2.038
					(0.024)	(0.312)
Control Variables						
$CreditBoom$	1.855***	0.624	2.136***	1.211*	1.325***	0.557
	(0.009)	(0.368)	(0.001)	(0.071)	(0.008)	(0.272)
$Ln(GDPpercap)_t$	5.928***	6.021***	6.333***	6.221***	6.377***	6.354***
	(0.000)	(0.000)	(0.000)	(0.000)	(0.000)	(0.000)
$Ln(PrivCredit/GDP)_t$	0.404	0.567*	0.387	0.525	0.381	0.522
	(0.234)	(0.081)	(0.248)	(0.104)	(0.249)	(0.106)
HHI_t	0.929	1.833***	1.441**	1.922***	1.621**	1.946***
	(0.175)	(0.002)	(0.028)	(0.001)	(0.011)	(0.001)
HHI_{t-1}	-0.153	-0.190	-0.038	0.186	0.154	0.362
	(0.821)	(0.783)	(0.954)	(0.774)	(0.811)	(0.566)
HHI_{t-2}	0.002	0.009	0.019	0.165	0.154	0.270
	(0.997)	(0.989)	(0.977)	(0.795)	(0.811)	(0.665)
CAB_t	0.097	0.094	0.104	0.101	0.106	0.096
	(0.186)	(0.209)	(0.162)	(0.166)	(0.147)	(0.176)
CAB_{t-1}	-0.242***	-0.267***	-0.269***	-0.277***	-0.278***	-0.276***
	(0.001)	(0.000)	(0.000)	(0.000)	(0.000)	(0.000)
$REER_t$	0.030**	0.023*	0.027**	0.022*	0.028**	0.022*
	(0.028)	(0.079)	(0.044)	(0.088)	(0.039)	(0.087)
$M3/GDP_t$	-0.009	-0.012*	-0.012**	-0.011*	-0.012**	-0.013**
	(0.119)	(0.059)	(0.047)	(0.066)	(0.043)	(0.031)
$Unemp_t$	0.335***	0.311***	0.357***	0.327***	0.349***	0.332***
	(0.000)	(0.000)	(0.000)	(0.000)	(0.000)	(0.000)
Observations	377	377	377	377	377	377

p-value in parentheses
*** p<0.01, ** p<0.05, * p<0.1

Table B.18: Results of probit models for BNB lending with interaction variable between credit boom periods and connectivity measures, Luxembourg excluded

	Bank-to-Non-Bank Lending					
	(1)	(2)	(3)	(4)	(5)	(6)
Connectivity Measure						
$Ln(FC)$	-3.179***	-0.321				
	(0.000)	(0.641)				
$Ln(BCC)$			-1.738***	-1.056**		
			(0.001)	(0.044)		
$Ln(WCC)$					-3.015***	-1.177
					(0.001)	(0.171)
Interaction Variables						
$Ln(FC) * CreditBoom$	2.172	0.235				
	(0.182)	(0.883)				
$Ln(BCC) * CreditBoom$			1.104	0.288		
			(0.458)	(0.852)		
$Ln(WCC) * CreditBoom$					-1.450	-2.728
					(0.650)	(0.362)
Control Variables						
$CreditBoom$	1.835*	0.157	1.101	0.144	0.117	-0.592
	(0.099)	(0.885)	(0.253)	(0.882)	(0.884)	(0.420)
$Ln(GDPpercap)_t$	6.407***	6.208***	6.423***	6.119***	6.523***	6.163***
	(0.000)	(0.000)	(0.000)	(0.000)	(0.000)	(0.000)
$Ln(PrivCredit/GDP)_t$	0.523	0.738**	0.570*	0.746**	0.615*	0.769**
	(0.129)	(0.025)	(0.099)	(0.026)	(0.076)	(0.021)
HHI_t	1.466**	2.733***	2.049***	2.753***	2.194***	2.859***
	(0.049)	(0.000)	(0.003)	(0.000)	(0.001)	(0.000)
HHI_{t-1}	1.093	1.235*	1.311**	0.969	1.463**	1.142*
	(0.105)	(0.078)	(0.050)	(0.137)	(0.028)	(0.068)
HHI_{t-2}	0.913	1.591**	1.133	1.339*	1.061	1.416**
	(0.192)	(0.021)	(0.103)	(0.051)	(0.128)	(0.036)
CAB_t	0.132*	0.103	0.097	0.093	0.105	0.098
	(0.086)	(0.174)	(0.215)	(0.226)	(0.178)	(0.201)
CAB_{t-1}	-0.297***	-0.298***	-0.281***	-0.288***	-0.304***	-0.298***
	(0.000)	(0.000)	(0.000)	(0.000)	(0.000)	(0.000)
$REER_t$	0.033**	0.029**	0.036**	0.029**	0.035**	0.029**
	(0.017)	(0.032)	(0.011)	(0.032)	(0.013)	(0.031)
$M3/GDP_t$	-0.017***	-0.021***	-0.019***	-0.021***	-0.022***	-0.021***
	(0.006)	(0.001)	(0.002)	(0.001)	(0.001)	(0.001)
$Unemp_t$	0.330***	0.339***	0.351***	0.323***	0.365***	0.338***
	(0.000)	(0.000)	(0.000)	(0.000)	(0.000)	(0.000)
Observations	377	377	377	377	377	377

p-value in parentheses
*** p<0.01, ** p<0.05, * p<0.1

Table B.19: Results of probit models for BB lending with interaction variable between capital inflow periods and connectivity measures, Luxembourg excluded

	Bank-to-Bank Lending					
	(1)	(2)	(3)	(4)	(5)	(6)
Connectivity Measure						
$Ln(FC)$	-3.448***	-1.829***				
	(0.000)	(0.001)				
$Ln(BCC)$			-2.219***	-1.059**		
			(0.000)	(0.027)		
$Ln(WCC)$					-3.123***	-1.306*
					(0.000)	(0.094)
Interaction Variables						
$Ln(FC) * CapitalInflow$	3.998***	2.487**				
	(0.000)	(0.018)				
$Ln(BCC) * CapitalInflow$			2.673***	1.963**		
			(0.006)	(0.038)		
$Ln(WCC) * CapitalInflow$					4.280**	3.585**
					(0.011)	(0.039)
Control Variables						
$CapitalInflow$	1.547**	1.356**	0.735	1.047**	0.264	0.762*
	(0.018)	(0.022)	(0.204)	(0.048)	(0.546)	(0.067)
$Ln(GDPpercap)_t$	6.251***	5.716***	6.619***	6.039***	6.517***	6.157***
	(0.000)	(0.000)	(0.000)	(0.000)	(0.000)	(0.000)
$Ln(PrivCredit/GDP)_t$	0.455	0.626*	0.405	0.602*	0.437	0.607*
	(0.183)	(0.055)	(0.217)	(0.064)	(0.180)	(0.061)
HHI_t	0.993	1.787***	1.705***	1.840***	1.833***	1.893***
	(0.162)	(0.003)	(0.008)	(0.003)	(0.004)	(0.002)
HHI_{t-1}	-0.030	-0.149	0.039	0.439	0.114	0.579
	(0.964)	(0.831)	(0.951)	(0.491)	(0.856)	(0.362)
HHI_{t-2}	0.014	-0.041	0.046	0.098	0.149	0.186
	(0.983)	(0.949)	(0.943)	(0.878)	(0.815)	(0.766)
CAB_t	0.135*	0.103	0.110	0.109	0.106	0.096
	(0.087)	(0.164)	(0.146)	(0.133)	(0.150)	(0.176)
CAB_{t-1}	-0.334***	-0.270***	-0.322***	-0.284***	-0.315***	-0.274***
	(0.000)	(0.000)	(0.000)	(0.000)	(0.000)	(0.000)
$REER_t$	0.043***	0.025*	0.037***	0.023*	0.034**	0.021
	(0.003)	(0.063)	(0.007)	(0.077)	(0.013)	(0.105)
$M3/GDP_t$	-0.012*	-0.012*	-0.013**	-0.014**	-0.014**	-0.015**
	(0.064)	(0.052)	(0.045)	(0.028)	(0.036)	(0.019)
$Unemp_t$	0.351***	0.308***	0.353***	0.322***	0.351***	0.330***
	(0.000)	(0.000)	(0.000)	(0.000)	(0.000)	(0.000)
Observations	377	377	377	377	377	377

p-value in parentheses
*** p<0.01, ** p<0.05, * p<0.1

Table B.20: Results of probit models for BNB lending with interaction variable between capital inflow periods and connectivity measures, Luxembourg excluded

	Bank-to-Non-Bank Lending					
	(1)	(2)	(3)	(4)	(5)	(6)
Connectivity Measure						
$Ln(FC)$	-3.418***	-0.551				
	(0.000)	(0.431)				
$Ln(BCC)$			-2.066***	-1.141**		
			(0.000)	(0.030)		
$Ln(WCC)$					-3.835***	-1.627*
					(0.000)	(0.064)
Interaction Variables						
$Ln(FC) * CapitalInflow$	3.053**	1.465				
	(0.014)	(0.165)				
$Ln(BCC) * CapitalInflow$			2.950***	1.157		
			(0.005)	(0.275)		
$Ln(WCC) * CapitalInflow$					4.554**	2.166
					(0.027)	(0.300)
Control Variables						
$CapitalInflow$	1.128	0.816	0.881	0.558	0.183	0.382
	(0.161)	(0.202)	(0.170)	(0.336)	(0.712)	(0.393)
$Ln(GDPpercap)_t$	6.720***	6.101***	7.134***	6.119***	7.132***	6.193***
	(0.000)	(0.000)	(0.000)	(0.000)	(0.000)	(0.000)
$Ln(PrivCredit/GDP)_t$	0.526	0.723**	0.544	0.732**	0.564	0.725**
	(0.123)	(0.026)	(0.116)	(0.025)	(0.101)	(0.026)
HHI_t	1.493*	2.600***	2.046***	2.681***	2.309***	2.767***
	(0.051)	(0.000)	(0.004)	(0.000)	(0.001)	(0.000)
HHI_{t-1}	1.059	1.101	1.417**	0.897	1.565**	1.126*
	(0.115)	(0.124)	(0.038)	(0.174)	(0.020)	(0.074)
HHI_{t-2}	0.928	1.520**	1.154	1.302*	1.153	1.421**
	(0.186)	(0.028)	(0.102)	(0.058)	(0.100)	(0.036)
CAB_t	0.145*	0.110	0.127	0.104	0.124	0.108
	(0.076)	(0.144)	(0.139)	(0.177)	(0.138)	(0.159)
CAB_{t-1}	-0.362***	-0.303***	-0.364***	-0.297***	-0.372***	-0.303***
	(0.000)	(0.000)	(0.000)	(0.000)	(0.000)	(0.000)
$REER_t$	0.042***	0.030**	0.046***	0.031**	0.044***	0.031**
	(0.003)	(0.030)	(0.002)	(0.025)	(0.003)	(0.024)
$M3/GDP_t$	-0.019***	-0.021***	-0.021***	-0.021***	-0.023***	-0.020***
	(0.004)	(0.001)	(0.002)	(0.001)	(0.001)	(0.001)
$Unemp_t$	0.339***	0.334***	0.370***	0.321***	0.372***	0.332***
	(0.000)	(0.000)	(0.000)	(0.000)	(0.000)	(0.000)
Observations	377	377	377	377	377	377

p-value in parentheses
*** p<0.01, ** p<0.05, * p<0.1

Table B.21: Results of probit models for BB lending with interaction variable between credit boom periods and connectivity measures, US excluded

	Bank-to-Bank Lending					
	(1)	(2)	(3)	(4)	(5)	(6)
Connectivity Measure						
$Ln(FC)$	-3.271***	-1.621***				
	(0.000)	(0.006)				
$Ln(BCC)$			-2.563***	-1.084**		
			(0.000)	(0.032)		
$Ln(WCC)$					-3.133***	-0.942
					(0.000)	(0.227)
Interaction Variables						
$Ln(FC) * CreditBoom$	2.184**	1.041				
	(0.037)	(0.295)				
$Ln(BCC) * CreditBoom$			2.755***	1.856*		
			(0.004)	(0.066)		
$Ln(WCC) * CreditBoom$					3.587**	1.876
					(0.017)	(0.226)
Control Variables						
$CreditBoom$	1.659**	0.887	1.960***	1.322**	1.234**	0.759*
	(0.019)	(0.175)	(0.002)	(0.028)	(0.011)	(0.099)
$Ln(GDPpercap)_t$	6.256***	6.128***	6.690***	6.466***	6.460***	6.577***
	(0.000)	(0.000)	(0.000)	(0.000)	(0.000)	(0.000)
$Ln(PrivCredit/GDP)_t$	0.456	0.641**	0.472	0.569**	0.546*	0.584**
	(0.121)	(0.023)	(0.106)	(0.045)	(0.055)	(0.040)
HHI_t	0.852	1.612***	1.450**	1.788***	1.607***	1.831***
	(0.177)	(0.005)	(0.014)	(0.002)	(0.006)	(0.001)
HHI_{t-1}	-0.108	-0.030	-0.092	0.374	0.223	0.490
	(0.864)	(0.963)	(0.883)	(0.532)	(0.709)	(0.408)
HHI_{t-2}	-0.231	-0.052	-0.107	0.071	0.141	0.243
	(0.712)	(0.933)	(0.863)	(0.906)	(0.814)	(0.679)
CAB_t	0.110	0.089	0.114	0.095	0.107	0.087
	(0.130)	(0.214)	(0.117)	(0.174)	(0.129)	(0.196)
CAB_{t-1}	-0.238***	-0.243***	-0.267***	-0.259***	-0.268***	-0.257***
	(0.001)	(0.001)	(0.000)	(0.000)	(0.000)	(0.000)
$REER_t$	0.056***	0.047***	0.055***	0.046***	0.054***	0.046***
	(0.000)	(0.001)	(0.000)	(0.001)	(0.000)	(0.001)
$M3/GDP_t$	-0.011*	-0.013**	-0.014**	-0.013**	-0.014**	-0.015**
	(0.069)	(0.033)	(0.021)	(0.024)	(0.016)	(0.011)
$Unemp_t$	0.444***	0.404***	0.464***	0.419***	0.446***	0.422***
	(0.000)	(0.000)	(0.000)	(0.000)	(0.000)	(0.000)
Observations	391	391	391	391	391	391

p-value in parentheses
*** p<0.01, ** p<0.05, * p<0.1

Table B.22: Results of probit models for BNB lending with interaction variable between credit boom periods and connectivity measures, US excluded

	Bank-to-Non-Bank Lending					
	(1)	(2)	(3)	(4)	(5)	(6)
Connectivity Measure						
$Ln(FC)$	-3.300***	-0.411				
	(0.000)	(0.545)				
$Ln(BCC)$			-1.848***	-0.712		
			(0.000)	(0.175)		
$Ln(WCC)$					-3.230***	-0.675
					(0.000)	(0.427)
Interaction Variables						
$Ln(FC) * CreditBoom$	1.723	1.057				
	(0.263)	(0.435)				
$Ln(BCC) * CreditBoom$			0.406	0.894		
			(0.787)	(0.488)		
$Ln(WCC) * CreditBoom$					-5.565	-0.893
					(0.182)	(0.724)
Control Variables						
$CreditBoom$	1.503	0.986	0.599	0.811	-1.039	0.086
	(0.171)	(0.302)	(0.557)	(0.339)	(0.350)	(0.893)
$Ln(GDPpercap)_t$	6.741***	6.724***	6.810***	6.638***	6.891***	6.611***
	(0.000)	(0.000)	(0.000)	(0.000)	(0.000)	(0.000)
$Ln(PrivCredit/GDP)_t$	0.523*	0.675**	0.601**	0.657**	0.653**	0.684**
	(0.085)	(0.023)	(0.046)	(0.029)	(0.031)	(0.022)
HHI_t	1.370*	2.588***	1.921***	2.589***	2.012***	2.647***
	(0.069)	(0.000)	(0.006)	(0.000)	(0.003)	(0.000)
HHI_{t-1}	0.505	0.833	0.689	0.733	0.831	0.826
	(0.466)	(0.244)	(0.321)	(0.271)	(0.230)	(0.197)
HHI_{t-2}	0.751	1.428**	1.010	1.239*	0.845	1.318*
	(0.280)	(0.041)	(0.146)	(0.078)	(0.233)	(0.055)
CAB_t	0.134*	0.082	0.090	0.080	0.089	0.080
	(0.071)	(0.246)	(0.228)	(0.258)	(0.233)	(0.254)
CAB_{t-1}	-0.279***	-0.263***	-0.260***	-0.257***	-0.270***	-0.262***
	(0.000)	(0.000)	(0.000)	(0.000)	(0.000)	(0.000)
$REER_t$	0.057***	0.052***	0.059***	0.053***	0.060***	0.054***
	(0.000)	(0.000)	(0.000)	(0.000)	(0.000)	(0.000)
$M3/GDP_t$	-0.019***	-0.022***	-0.020***	-0.022***	-0.023***	-0.022***
	(0.002)	(0.000)	(0.001)	(0.000)	(0.000)	(0.000)
$Unemp_t$	0.441***	0.452***	0.472***	0.445***	0.491***	0.448***
	(0.000)	(0.000)	(0.000)	(0.000)	(0.000)	(0.000)
Observations	391	391	391	391	391	391

p-value in parentheses
*** p<0.01, ** p<0.05, * p<0.1

Table B.23: Results of probit models for BB lending with interaction variable between capital inflow periods and connectivity measures, US excluded

	Bank-to-Bank Lending					
	(1)	(2)	(3)	(4)	(5)	(6)
Connectivity Measure						
$Ln(FC)$	-3.297***	-1.524***				
	(0.000)	(0.004)				
$Ln(BCC)$			-1.889***	-0.737*		
			(0.000)	(0.093)		
$Ln(WCC)$					-2.329***	-0.755
					(0.001)	(0.276)
Interaction Variables						
$Ln(FC) * CapitalInflow$	2.849***	1.696*				
	(0.005)	(0.075)				
$Ln(BCC) * CapitalInflow$			1.521	1.447		
			(0.123)	(0.107)		
$Ln(WCC) * CapitalInflow$					2.898*	3.090*
					(0.099)	(0.065)
Control Variables						
$CapitalInflow$	0.966	0.938*	0.228	0.774	0.072	0.651
	(0.120)	(0.077)	(0.689)	(0.115)	(0.873)	(0.108)
$Ln(GDPpercap)_t$	6.322***	6.015***	6.541***	6.265***	6.322***	6.434***
	(0.000)	(0.000)	(0.000)	(0.000)	(0.000)	(0.000)
$Ln(PrivCredit/GDP)_t$	0.534*	0.634**	0.526*	0.641**	0.610**	0.640**
	(0.067)	(0.026)	(0.064)	(0.023)	(0.029)	(0.024)
HHI_t	0.801	1.627***	1.559***	1.754***	1.666***	1.820***
	(0.218)	(0.005)	(0.007)	(0.002)	(0.004)	(0.001)
HHI_{t-1}	-0.120	-0.016	0.055	0.480	0.248	0.579
	(0.848)	(0.981)	(0.928)	(0.422)	(0.673)	(0.334)
HHI_{t-2}	-0.406	-0.200	-0.218	0.007	-0.017	0.122
	(0.526)	(0.744)	(0.721)	(0.991)	(0.978)	(0.837)
CAB_t	0.131*	0.091	0.106	0.096	0.100	0.085
	(0.085)	(0.195)	(0.143)	(0.164)	(0.153)	(0.208)
CAB_{t-1}	-0.309***	-0.247***	-0.294***	-0.260***	-0.289***	-0.255***
	(0.000)	(0.001)	(0.000)	(0.000)	(0.000)	(0.000)
$REER_t$	0.063***	0.048***	0.057***	0.047***	0.054***	0.045***
	(0.000)	(0.001)	(0.000)	(0.001)	(0.000)	(0.001)
$M3/GDP_t$	-0.014**	-0.014**	-0.015**	-0.016***	-0.016**	-0.017***
	(0.033)	(0.020)	(0.018)	(0.009)	(0.013)	(0.005)
$Unemp_t$	0.449***	0.403***	0.438***	0.410***	0.428***	0.418***
	(0.000)	(0.000)	(0.000)	(0.000)	(0.000)	(0.000)
Observations	391	391	391	391	391	391

p-value in parentheses
*** p<0.01, ** p<0.05, * p<0.1

Table B.24: Results of probit models for BNB lending with interaction variable between capital inflow periods and connectivity measures, US excluded

	Bank-to-Non-Bank Lending					
	(1)	(2)	(3)	(4)	(5)	(6)
Connectivity Measure						
$Ln(FC)$	-3.335***	-0.419				
	(0.000)	(0.519)				
$Ln(BCC)$			-2.124***	-0.677		
			(0.000)	(0.181)		
$Ln(WCC)$					-4.015***	-0.869
					(0.000)	(0.303)
Interaction Variables						
$Ln(FC) * CapitalInflow$	2.017*	0.867				
	(0.065)	(0.363)				
$Ln(BCC) * CapitalInflow$			2.324**	0.532		
			(0.021)	(0.583)		
$Ln(WCC) * CapitalInflow$					3.144	0.857
					(0.135)	(0.665)
Control Variables						
$CapitalInflow$	0.571	0.533	0.612	0.313	-0.009	0.217
	(0.430)	(0.342)	(0.319)	(0.550)	(0.986)	(0.603)
$Ln(GDPpercap)_t$	6.715***	6.455***	7.176***	6.405***	7.152***	6.482***
	(0.000)	(0.000)	(0.000)	(0.000)	(0.000)	(0.000)
$Ln(PrivCredit/GDP)_t$	0.571*	0.724**	0.632**	0.729**	0.665**	0.732**
	(0.054)	(0.014)	(0.033)	(0.012)	(0.024)	(0.012)
HHI_t	1.392*	2.504***	1.987***	2.562***	2.207***	2.653***
	(0.067)	(0.000)	(0.006)	(0.000)	(0.001)	(0.000)
HHI_{t-1}	0.492	0.708	0.717	0.642	0.864	0.795
	(0.475)	(0.325)	(0.307)	(0.336)	(0.214)	(0.215)
HHI_{t-2}	0.855	1.350*	1.183*	1.190*	0.997	1.293*
	(0.222)	(0.052)	(0.096)	(0.089)	(0.164)	(0.060)
CAB_t	0.136*	0.084	0.109	0.083	0.102	0.082
	(0.076)	(0.232)	(0.174)	(0.244)	(0.193)	(0.243)
CAB_{t-1}	-0.329***	-0.263***	-0.326***	-0.258***	-0.320***	-0.261***
	(0.000)	(0.000)	(0.000)	(0.000)	(0.000)	(0.000)
$REER_t$	0.062***	0.052***	0.070***	0.053***	0.069***	0.053***
	(0.000)	(0.000)	(0.000)	(0.000)	(0.000)	(0.000)
$M3/GDP_t$	-0.020***	-0.022***	-0.022***	-0.022***	-0.024***	-0.022***
	(0.001)	(0.000)	(0.001)	(0.000)	(0.000)	(0.000)
$Unemp_t$	0.441***	0.442***	0.486***	0.435***	0.486***	0.442***
	(0.000)	(0.000)	(0.000)	(0.000)	(0.000)	(0.000)
Observations	391	391	391	391	391	391

p-value in parentheses
*** p<0.01, ** p<0.05, * p<0.1

Table B.25: Results of probit models for BB lending with interaction variable between credit boom periods calculated as two standard deviation above of its historical country average and connectivity measures

	Bank-to-Bank Lending					
	(1)	(2)	(3)	(4)	(5)	(6)
Connectivity Measure						
$Ln(FC)$	-2.126***	-1.014**				
	(0.000)	(0.037)				
$Ln(BCC)$			-1.390***	-0.379		
			(0.001)	(0.352)		
$Ln(WCC)$					-1.732***	-0.202
					(0.007)	(0.755)
Interaction Variables						
$Ln(FC) * CreditBoom$	2.287	0.476				
	(0.218)	(0.586)				
$Ln(BCC) * CreditBoom$			2.911	0.778		
			(0.174)	(0.417)		
$Ln(WCC) * CreditBoom$					2.210	1.890
					(0.153)	(0.432)
Control Variables						
$CreditBoom$	1.214	0.284	1.668	0.167	1.807	0.155
	(0.324)	(0.587)	(0.236)	(0.740)	(0.275)	(0.757)
$Ln(GDPpercap)_t$	5.268***	5.332***	5.779***	5.681***	5.633***	5.775***
	(0.000)	(0.000)	(0.000)	(0.000)	(0.000)	(0.000)
$Ln(PrivCredit/GDP)_t$	0.652**	0.863***	0.674**	0.823***	0.742***	0.833***
	(0.024)	(0.002)	(0.018)	(0.003)	(0.008)	(0.003)
HHI_t	1.170*	1.844***	1.737***	1.939***	1.804***	1.994***
	(0.050)	(0.001)	(0.002)	(0.000)	(0.001)	(0.000)
HHI_{t-1}	-0.059	0.028	-0.105	0.380	0.069	0.428
	(0.921)	(0.962)	(0.854)	(0.495)	(0.902)	(0.442)
HHI_{t-2}	0.102	0.143	0.128	0.321	0.222	0.403
	(0.859)	(0.798)	(0.822)	(0.563)	(0.688)	(0.463)
CAB_t	0.107	0.093	0.111	0.098	0.111*	0.093
	(0.118)	(0.171)	(0.104)	(0.141)	(0.099)	(0.156)
CAB_{t-1}	-0.242***	-0.257***	-0.266***	-0.271***	-0.274***	-0.270***
	(0.000)	(0.000)	(0.000)	(0.000)	(0.000)	(0.000)
$REER_t$	0.029**	0.031**	0.030**	0.031**	0.033***	0.031**
	(0.029)	(0.011)	(0.019)	(0.011)	(0.009)	(0.012)
$M3/GDP_t$	-0.011*	-0.014**	-0.013**	-0.016***	-0.014**	-0.017***
	(0.070)	(0.015)	(0.026)	(0.006)	(0.018)	(0.004)
$Unemp_t$	0.392***	0.373***	0.412***	0.387***	0.398***	0.391***
	(0.000)	(0.000)	(0.000)	(0.000)	(0.000)	(0.000)
Observations	427	427	427	427	427	427

p-value in parentheses
*** p<0.01, ** p<0.05, * p<0.1

Table B.26: Results of probit models for BNB lending with interaction variable between credit boom periods calculated as two standard deviation above of its historical country average and connectivity measures

	Bank-to-Non-Bank Lending					
	(1)	(2)	(3)	(4)	(5)	(6)
Connectivity Measure						
$Ln(FC)$	-2.575***	-0.151				
	(0.000)	(0.734)				
$Ln(BCC)$				-0.621		
				(0.185)		
$Ln(WCC)$					-2.642***	-0.695
					(0.001)	(0.372)
Interaction Variables						
$Ln(FC) * CreditBoom$	2.583	0.751				
	(0.414)	(0.410)				
$Ln(BCC) * CreditBoom$				0.827		
				(0.449)		
$Ln(WCC) * CreditBoom$					3.823	1.841
					(0.440)	(0.463)
Control Variables						
$CreditBoom$	1.063	0.186		0.157	2.001	0.108
	(0.465)	(0.865)		(0.757)	(0.560)	(0.830)
$Ln(GDPpercap)_t$	5.558***	5.634***		5.477***	5.766***	5.522***
	(0.000)	(0.000)		(0.000)	(0.000)	(0.000)
$Ln(PrivCredit/GDP)_t$	0.743**	0.895***		0.891***	0.861***	0.896***
	(0.012)	(0.002)		(0.002)	(0.004)	(0.002)
HHI_t	1.308*	2.547***		2.493***	2.036***	2.549***
	(0.057)	(0.000)		(0.000)	(0.001)	(0.000)
HHI_{t-1}	0.802	1.194*		0.950	1.173*	1.077*
	(0.203)	(0.076)		(0.128)	(0.063)	(0.073)
HHI_{t-2}	0.643	1.337**		1.127*	0.775	1.232*
	(0.317)	(0.038)		(0.079)	(0.233)	(0.051)
CAB_t	0.129*	0.095		0.094	0.102	0.095
	(0.067)	(0.164)		(0.173)	(0.155)	(0.166)
CAB_{t-1}	-0.273***	-0.272***		-0.266***	-0.278***	-0.270***
	(0.000)	(0.000)		(0.000)	(0.000)	(0.000)
$REER_t$	0.041***	0.042***		0.041***	0.045***	0.042***
	(0.001)	(0.001)		(0.001)	(0.001)	(0.001)
$M3/GDP_t$	-0.019***	-0.023***		-0.022***	-0.023***	-0.023***
	(0.001)	(0.000)		(0.000)	(0.000)	(0.000)
$Unemp_t$	0.387***	0.408***		0.392***	0.426***	0.398***
	(0.000)	(0.000)		(0.000)	(0.000)	(0.000)
Observations	427	427	427	427	427	427

p-value in parentheses
*** p<0.01, ** p<0.05, * p<0.1

Table B.27: Results of probit models for BB lending with interaction variable between capital inflow periods calculated as two standard deviation above of its historical country average and connectivity measures

	Bank-to-Bank Lending					
	(1)	(2)	(3)	(4)	(5)	(6)
Connectivity Measure						
$Ln(FC)$	-2.148***	-0.832*				
	(0.000)	(0.092)				
$Ln(BCC)$			-1.348***	-0.196		
			(0.001)	(0.641)		
$Ln(WCC)$					-1.710***	-0.129
					(0.008)	-(0.765)
Interaction Variables						
$Ln(FC) * CapitalInflow$	-1.602	2.155**				
	(0.561)	(0.020)				
$Ln(BCC) * CapitalInflow$			-2.254	2.566**		
			(0.313)	(0.011)		
$Ln(WCC) * CapitalInflow$					-2.750	4.805***
					(0.318)	(0.010)
Control Variables						
$CapitalInflow$	-2.367	-0.467	-1.683	-0.573	-3.701	-0.604
	(0.276)	(0.366)	(0.232)	(0.271)	(0.158)	(0.245)
$Ln(GDPpercap)_t$	4.879***	5.208***	5.238***	5.544***	5.176***	5.595***
	(0.000)	(0.000)	(0.000)	(0.000)	(0.000)	(0.000)
$Ln(PrivCredit/GDP)_t$	0.699**	0.793***	0.710**	0.757***	0.757***	0.759***
	(0.015)	(0.005)	(0.013)	(0.008)	(0.007)	(0.008)
HHI_t	1.309**	1.991***	1.821***	2.132***	1.924***	2.154***
	(0.035)	(0.001)	(0.002)	(0.000)	(0.001)	(0.000)
HHI_{t-1}	-0.127	0.119	-0.010	0.442	0.153	0.535
	(0.827)	(0.844)	(0.987)	(0.434)	(0.785)	(0.344)
HHI_{t-2}	-0.091	0.006	-0.032	0.162	0.082	0.221
	(0.875)	(0.992)	(0.955)	(0.776)	(0.885)	(0.695)
CAB_t	0.118*	0.111	0.125*	0.107	0.122*	0.101
	(0.090)	(0.110)	(0.075)	(0.114)	(0.079)	(0.131)
CAB_{t-1}	-0.257***	-0.271***	-0.279***	-0.278***	-0.281***	-0.277***
	(0.000)	(0.000)	(0.000)	(0.000)	(0.000)	(0.000)
$REER_t$	0.031**	0.028**	0.028**	0.027**	0.029**	0.025**
	(0.015)	(0.023)	(0.027)	(0.032)	(0.024)	(0.045)
$M3/GDP_t$	-0.016**	-0.020***	-0.018***	-0.022***	-0.019***	-0.023***
	(0.011)	(0.001)	(0.005)	(0.000)	(0.002)	(0.000)
$Unemp_t$	0.374***	0.357***	0.384***	0.367***	0.377***	0.368***
	(0.000)	(0.000)	(0.000)	(0.000)	(0.000)	(0.000)
Observations	427	427	404	404	406	406

p-value in parentheses
*** p<0.01, ** p<0.05, * p<0.1

Table B.28: Results of probit models for BNB lending with interaction variable between capital inflow periods calculated as two standard deviation above of its historical country average and connectivity measures

	Bank-to-Non-Bank Lending					
	(1)	(2)	(3)	(4)	(5)	(6)
Connectivity Measure						
$Ln(FC)$	-2.416***	0.298				
	(0.000)	(0.637)				
$Ln(BCC)$			-1.235***	-0.503		
			(0.009)	(0.288)		
$Ln(WCC)$					-2.264***	-0.715
					(0.006)	(0.368)
Interaction Variables						
$Ln(FC) * CapitalInflow$	-1.966	2.043**				
	(0.367)	(0.042)				
$Ln(BCC) * CapitalInflow$			-2.354	2.236**		
			(0.176)	(0.037)		
$Ln(WCC) * CapitalInflow$					-2.839	4.681**
					(0.315)	(0.030)
Control Variables						
$CapitalInflow$	-2.856	-0.297	-1.557	-0.264	-1.044	-0.211
	(0.263)	(0.578)	(0.102)	(0.622)	(0.184)	(0.695)
$Ln(GDPpercap)_t$	4.941***	5.196***	5.073***	5.052***	5.123***	5.132***
	(0.000)	(0.000)	(0.000)	(0.000)	(0.000)	(0.000)
$Ln(PrivCredit/GDP)_t$	0.826***	0.939***	0.906***	0.924***	0.956***	0.916***
	(0.007)	(0.002)	(0.003)	(0.002)	(0.002)	(0.003)
HHI_t	1.533**	2.799***	2.165***	2.688***	2.344***	2.756***
	(0.035)	(0.000)	(0.002)	(0.000)	(0.000)	(0.000)
HHI_{t-1}	0.864	1.510**	1.157*	1.162*	1.297**	1.320**
	(0.181)	(0.031)	(0.076)	(0.072)	(0.046)	(0.035)
HHI_{t-2}	0.767	1.444**	1.007	1.128*	0.945	1.190*
	(0.245)	(0.032)	(0.127)	(0.092)	(0.156)	(0.070)
CAB_t	0.147**	0.119*	0.118	0.121*	0.122*	0.124*
	(0.043)	(0.091)	(0.111)	(0.091)	(0.097)	(0.081)
CAB_{t-1}	-0.282***	-0.282***	-0.277***	-0.278***	-0.288***	-0.284***
	(0.000)	(0.000)	(0.000)	(0.000)	(0.000)	(0.000)
$REER_t$	0.037***	0.040***	0.041***	0.039***	0.041***	0.040***
	(0.003)	(0.002)	(0.002)	(0.003)	(0.002)	(0.002)
$M3/GDP_t$	-0.023***	-0.028***	-0.025***	-0.027***	-0.027***	-0.028***
	(0.000)	(0.000)	(0.000)	(0.000)	(0.000)	(0.000)
$Unemp_t$	0.370***	0.400***	0.398***	0.380***	0.407***	0.388***
	(0.000)	(0.000)	(0.000)	(0.000)	(0.000)	(0.000)
Observations	427	427	404	404	406	406

p-value in parentheses
*** p<0.01, ** p<0.05, * p<0.1

Table B.29: Results of probit models for BB lending, controlling for three-way interaction variable between connectivity, credit boom and capital inflow periods ($Ln(C) * Boom * Inflow$)

	Bank-to-Bank Lending					
	FC		**BCC**		**WCC**	
	(t)	**(t-1)**	**(t)**	**(t-1)**	**(t)**	**(t-1)**
Connectivity Measure						
$Ln(C)$	-4.006***	-2.134***	-3.315***	-1.384**	-4.312***	-1.448*
	(0.000)	(0.001)	(0.000)	(0.014)	(0.000)	(0.099)
Interaction Variables						
$Ln(C) * Boom$	4.454***	0.924	3.767***	1.808*	4.658***	1.618
	(0.002)	(0.425)	(0.001)	(0.088)	(0.005)	(0.312)
$Ln(C) * Inflow$	-0.813	-0.282	-0.692	0.343	0.286	3.708
	(0.535)	(0.813)	(0.591)	(0.780)	(0.915)	(0.198)
$Ln(C) * Boom * Inflow$	-1.751	-0.670	-3.278	-2.423	-1.526	-5.712
	(0.676)	(0.922)	(0.495)	(0.809)	(0.612)	(0.779)
Control Variables						
$Boom$	2.880***	0.484	2.417***	1.105	1.385**	0.480
	(0.004)	(0.559)	(0.001)	(0.107)	(0.015)	(0.369)
$Inflow$	-0.085	0.030	-0.236	0.232	0.134	0.587
	(0.908)	(0.960)	(0.730)	(0.694)	(0.811)	(0.240)
$Boom * Inflow$	0.291	1.058	-0.235	0.092	-0.055	0.302
	(0.890)	(0.693)	(0.908)	(0.978)	(0.976)	(0.870)
$Ln(GDPpercap)_t$	3.045**	3.957***	3.511***	4.230***	3.391***	4.137***
	(0.012)	(0.000)	(0.001)	(0.000)	(0.002)	(0.000)
$Ln(PrivCredit/GDP)_t$	1.510**	1.618***	1.314**	1.475***	1.400***	1.480***
	(0.016)	(0.002)	(0.013)	(0.004)	(0.007)	(0.003)
HHI_t	0.753	1.787***	1.882***	1.841***	1.831***	1.911***
	(0.342)	(0.007)	(0.007)	(0.005)	(0.006)	(0.004)
HHI_{t-1}	0.403	0.479	1.106	1.003	1.134*	1.088*
	(0.596)	(0.485)	(0.102)	(0.115)	(0.077)	(0.084)
HHI_{t-2}	0.849	1.037	1.233*	1.332**	1.369**	1.337**
	(0.240)	(0.102)	(0.060)	(0.030)	(0.032)	(0.026)
CAB_t	0.134	0.012	0.084	0.044	0.079	0.048
	(0.127)	(0.867)	(0.252)	(0.505)	(0.258)	(0.453)
CAB_{t-1}	-0.214**	-0.150**	-0.199***	-0.194***	-0.219***	-0.208***
	(0.013)	(0.047)	(0.008)	(0.007)	(0.002)	(0.003)
$M3/GDP_t$	-0.010	-0.019**	-0.019*	-0.022**	-0.019**	-0.023**
	(0.395)	(0.046)	(0.057)	(0.018)	(0.045)	(0.013)
Obs.	374	374	374	374	374	374

p-value in parentheses
*** p<0.01, ** p<0.05, * p<0.1

Table B.30: Results of probit models for BNB lending, controlling for three-way interaction variable between connectivity, credit boom and capital inflow periods ($Ln(C) * Boom * Inflow$)

	Bank-to-Non-Bank Lending					
	FC		**BCC**		**WCC**	
	(t)	**(t-1)**	**(t)**	**(t-1)**	**(t)**	**(t-1)**
Connectivity Measure						
$Ln(C)$	-4.308***	-3.051***	-3.296***	-1.303**	-4.860***	-1.715
	(0.000)	(0.000)	(0.000)	(0.033)	(0.000)	(0.113)
Interaction Variables						
$Ln(C) * Boom$	4.752**	0.363	1.198	-1.611	-2.115	-4.812
	(0.017)	(0.823)	(0.505)	(0.339)	(0.615)	(0.179)
$Ln(C) * Inflow$	-0.726	-0.452	-1.223	-0.623	-1.328	-1.147
	(0.588)	(0.672)	(0.335)	(0.554)	(0.607)	(0.609)
$Ln(C) * Boom * Inflow$	-4.376	0.789	-4.919	0.428	-1.864	4.374
	(0.485)	(0.864)	(0.484)	(0.923)	(0.852)	(0.546)
Control Variables						
$Boom$	3.478**	-0.088	0.764	-1.323	-0.649	-1.440
	(0.023)	(0.942)	(0.563)	(0.277)	(0.612)	(0.170)
$Inflow$	-0.039	-0.053	-0.445	-0.169	-0.080	-0.064
	(0.964)	(0.932)	(0.519)	(0.763)	(0.887)	(0.891)
$Boom * Inflow$	-2.717	1.832	-1.171	1.877	1.068	2.211
	(0.598)	(0.488)	(0.727)	(0.365)	(0.559)	(0.152)
$Ln(GDPpercap)_t$	3.739***	4.331***	3.778***	3.852***	3.934***	3.975***
	(0.003)	(0.000)	(0.001)	(0.000)	(0.000)	(0.000)
$Ln(PrivCredit/GDP)_t$	2.207***	1.780***	1.629***	1.752***	1.744***	1.724***
	(0.003)	(0.001)	(0.004)	(0.001)	(0.002)	(0.001)
HHI_t	0.195	1.695**	1.538**	2.020***	1.918***	2.196***
	(0.834)	(0.028)	(0.045)	(0.007)	(0.008)	(0.003)
HHI_{t-1}	0.459	0.082	0.644	0.715	0.672	0.990
	(0.637)	(0.922)	(0.448)	(0.357)	(0.416)	(0.185)
HHI_{t-2}	1.263	1.066	1.182	1.486*	1.536*	1.487*
	(0.225)	(0.222)	(0.204)	(0.080)	(0.091)	(0.080)
CAB_t	0.197**	-0.011	0.095	0.018	0.103	0.033
	(0.036)	(0.880)	(0.216)	(0.793)	(0.164)	(0.622)
CAB_{t-1}	-0.308***	-0.147*	-0.229***	-0.180**	-0.268***	-0.202***
	(0.001)	(0.052)	(0.003)	(0.012)	(0.000)	(0.004)
$M3/GDP_t$	-0.028**	-0.024**	-0.024**	-0.023***	-0.029***	-0.025***
	(0.018)	(0.010)	(0.013)	(0.010)	(0.004)	(0.005)
Obs.	374	374	374	374	374	374

p-value in parentheses
*** p<0.01, ** p<0.05, * p<0.1

Table B.31: Results of logit models for BB lending, controlling for credit boom periods

	Bank-to-Bank Lending					
	FC		**BCC**		**WCC**	
	(t)	**(t-1)**	**(t)**	**(t-1)**	**(t)**	**(t-1)**
Connectivity Measure						
$Ln(FC)$	-4.943***	-2.538***				
	(0.000)	(0.003)				
$Ln(BCC)$			-3.068***	-1.119		
			(0.000)	(0.106)		
$Ln(WCC)$					-3.770***	-0.909
					(0.001)	(0.398)
Control Variables						
$CreditBoom$	0.358	0.297	0.433	0.410	0.404	0.388
	(0.521)	(0.554)	(0.411)	(0.408)	(0.435)	(0.432)
$Ln(GDPpercap)_t$	6.926***	6.969***	6.589***	6.501***	6.555***	6.742***
	(0.000)	(0.000)	(0.000)	(0.000)	(0.000)	(0.000)
$Ln(PrivCredit/GDP)_t$	1.533***	1.791***	1.535***	1.714***	1.598***	1.729***
	(0.001)	(0.000)	(0.001)	(0.000)	(0.001)	(0.000)
HHI_t	1.040	2.753***	2.372**	2.892***	2.540***	3.008***
	(0.327)	(0.004)	(0.014)	(0.002)	(0.008)	(0.001)
HHI_{t-1}	-0.370	-0.469	0.066	0.420	0.326	0.572
	(0.714)	(0.648)	(0.946)	(0.659)	(0.731)	(0.545)
HHI_{t-2}	-0.283	-0.174	-0.167	0.258	0.094	0.445
	(0.776)	(0.858)	(0.864)	(0.785)	(0.921)	(0.634)
CAB_t	0.210*	0.175	0.199*	0.179	0.189*	0.164
	(0.071)	(0.130)	(0.084)	(0.113)	(0.094)	(0.138)
CAB_{t-1}	-0.383***	-0.385***	-0.410***	-0.407***	-0.412***	-0.405***
	(0.002)	(0.001)	(0.001)	(0.000)	(0.000)	(0.000)
$REER_t$	0.063***	0.054***	0.058***	0.052***	0.057***	0.052***
	(0.002)	(0.005)	(0.004)	(0.008)	(0.005)	(0.009)
$M3/GDP_t$	-0.024**	-0.027***	-0.027***	-0.031***	-0.028***	-0.032***
	(0.023)	(0.008)	(0.008)	(0.003)	(0.006)	(0.002)
$Unemp_t$	0.602***	0.577***	0.622***	0.599***	0.614***	0.613***
	(0.000)	(0.000)	(0.000)	(0.000)	(0.000)	(0.000)
Obs.	427	427	427	427	427	427

p-value in parentheses
*** p<0.01, ** p<0.05, * p<0.1

Table B.32: Results of logit models for BB lending, controlling for capital inflow periods

	Bank-to-Bank Lending					
	FC		**BCC**		**WCC**	
	(t)	**(t-1)**	**(t)**	**(t-1)**	**(t)**	**(t-1)**
$Ln(FC)$	-4.920***	-2.635***				
	(0.000)	(0.002)				
$Ln(BCC)$			-3.086***	-1.155		
			(0.000)	(0.100)		
$Ln(WCC)$					-3.793***	-0.990
					(0.001)	(0.362)
Control Variables						
$CapitalInflow$	-0.588	0.409	-0.677	0.347	-0.625	0.332
	(0.247)	(0.360)	(0.171)	(0.436)	(0.196)	(0.455)
$Ln(GDPpercap)_t$	6.958***	6.771***	6.610***	6.278***	6.584***	6.511***
	(0.000)	(0.000)	(0.000)	(0.000)	(0.000)	(0.000)
$Ln(PrivCredit/GDP)_t$	1.565***	1.853***	1.587***	1.784***	1.646***	1.799***
	(0.001)	(0.000)	(0.001)	(0.000)	(0.000)	(0.000)
HHI_t	1.185	2.657***	2.517***	2.822***	2.665***	2.939***
	(0.264)	(0.005)	(0.010)	(0.003)	(0.005)	(0.002)
HHI_{t-1}	-0.482	-0.545	-0.069	0.393	0.204	0.546
	(0.633)	(0.598)	(0.943)	(0.682)	(0.829)	(0.566)
HHI_{t-2}	-0.425	-0.226	-0.344	0.191	-0.071	0.382
	(0.669)	(0.815)	(0.724)	(0.840)	(0.941)	(0.681)
CAB_t	0.188	0.177	0.180	0.179	0.174	0.165
	(0.109)	(0.126)	(0.119)	(0.114)	(0.124)	(0.137)
CAB_{t-1}	-0.387***	-0.367***	-0.420***	-0.391***	-0.423***	-0.390***
	(0.001)	(0.002)	(0.000)	(0.001)	(0.000)	(0.001)
$REER_t$	0.065***	0.053***	0.061***	0.051***	0.060***	0.050**
	(0.001)	(0.007)	(0.003)	(0.010)	(0.003)	(0.011)
$M3/GDP_t$	-0.026**	-0.026**	-0.030***	-0.030***	-0.030***	-0.032***
	(0.016)	(0.010)	(0.005)	(0.004)	(0.004)	(0.002)
$Unemp_t$	0.587***	0.571***	0.604***	0.590***	0.598***	0.603***
	(0.000)	(0.000)	(0.000)	(0.000)	(0.000)	(0.000)
Obs.	427	427	427	427	427	427

p-value in parentheses
*** p<0.01, ** p<0.05, * p<0.1

Table B.33: Results of linear models for BB lending, controlling for credit boom periods

	Bank-to-Bank Lending					
	FC		**BCC**		**WCC**	
	(t)	**(t-1)**	**(t)**	**(t-1)**	**(t)**	**(t-1)**
Connectivity Measure						
$Ln(FC)$	-0.793***	-0.571***				
	(0.000)	(0.000)				
$Ln(BCC)$			-0.541***	-0.351***		
			(0.000)	(0.000)		
$Ln(WCC)$					-0.694***	-0.404***
					(0.000)	(0.004)
Control Variables						
$CreditBoom$	0.019	0.027	0.016	0.023	0.029	0.033
	(0.742)	(0.654)	(0.793)	(0.714)	(0.639)	(0.604)
$Ln(GDPpercap)_t$	0.541***	0.592***	0.585***	0.621***	0.590***	0.629***
	(0.000)	(0.000)	(0.000)	(0.000)	(0.000)	(0.000)
$Ln(PrivCredit/GDP)_t$	0.215***	0.249***	0.218***	0.245***	0.231***	0.251***
	(0.000)	(0.000)	(0.000)	(0.000)	(0.000)	(0.000)
HHI_t	0.008	0.240**	0.176	0.268**	0.214**	0.294***
	(0.943)	(0.025)	(0.100)	(0.013)	(0.047)	(0.007)
HHI_{t-1}	-0.086	-0.136	-0.027	-0.012	-0.009	0.015
	(0.406)	(0.225)	(0.798)	(0.916)	(0.931)	(0.895)
HHI_{t-2}	-0.072	-0.119	-0.068	-0.073	-0.039	-0.053
	(0.491)	(0.283)	(0.532)	(0.518)	(0.724)	(0.644)
CAB_t	0.025**	0.023*	0.029**	0.030**	0.029**	0.030**
	(0.043)	(0.075)	(0.024)	(0.024)	(0.023)	(0.023)
CAB_{t-1}	-0.038***	-0.041***	-0.045***	-0.049***	-0.048***	-0.050***
	(0.002)	(0.002)	(0.000)	(0.000)	(0.000)	(0.000)
$REER_t$	0.006***	0.006***	0.006***	0.006***	0.006***	0.006***
	(0.000)	(0.000)	(0.000)	(0.000)	(0.000)	(0.000)
$M3/GDP_t$	-0.001*	-0.001*	-0.001*	-0.001*	-0.001**	-0.001**
	(0.087)	(0.090)	(0.053)	(0.061)	(0.042)	(0.040)
$Unemp_t$	0.055***	0.056***	0.056***	0.058***	0.057***	0.059***
	(0.000)	(0.000)	(0.000)	(0.000)	(0.000)	(0.000)
Obs.	427	427	427	427	427	427

p-value in parentheses
*** p<0.01, ** p<0.05, * p<0.1

Table B.34: Results of linear models for BB lending, controlling for capital inflow periods

	Bank-to-Bank Lending					
	FC		**BCC**		**WCC**	
	(t)	**(t-1)**	**(t)**	**(t-1)**	**(t)**	**(t-1)**
Connectivity Measure						
$Ln(FC)$	-0.796***	-0.570***				
	(0.000)	(0.000)				
$Ln(BCC)$			-0.544***	-0.350***		
			(0.000)	(0.000)		
$Ln(WCC)$					-0.693***	-0.404***
					(0.000)	(0.004)
Control Variables						
$CapitalInflow$	-0.046	0.090	-0.044	0.089	-0.032	0.094
	(0.401)	(0.115)	(0.432)	(0.126)	(0.581)	(0.110)
$Ln(GDPpercap)_t$	0.549***	0.569***	0.593***	0.599***	0.594***	0.604***
	(0.000)	(0.000)	(0.000)	(0.000)	(0.000)	(0.000)
$Ln(PrivCredit/GDP)_t$	0.211***	0.253***	0.214***	0.250***	0.228***	0.256***
	(0.000)	(0.000)	(0.000)	(0.000)	(0.000)	(0.000)
HHI_t	0.006	0.228**	0.174	0.257**	0.213**	0.281***
	(0.959)	(0.032)	(0.103)	(0.018)	(0.049)	(0.010)
HHI_{t-1}	-0.088	-0.135	-0.030	-0.010	-0.008	0.015
	(0.394)	(0.228)	(0.782)	(0.925)	(0.939)	(0.890)
HHI_{t-2}	-0.072	-0.102	-0.068	-0.056	-0.036	-0.034
	(0.490)	(0.357)	(0.527)	(0.616)	(0.746)	(0.765)
CAB_t	0.024*	0.023*	0.028**	0.029**	0.029**	0.030**
	(0.055)	(0.078)	(0.030)	(0.025)	(0.027)	(0.024)
CAB_{t-1}	-0.038***	-0.037***	-0.045***	-0.045***	-0.048***	-0.047***
	(0.002)	(0.005)	(0.000)	(0.001)	(0.000)	(0.001)
$REER_t$	0.006***	0.006***	0.006***	0.006***	0.006***	0.006***
	(0.000)	(0.000)	(0.000)	(0.001)	(0.000)	(0.001)
$M3/GDP_t$	-0.001*	-0.001	-0.001**	-0.001*	-0.001**	-0.001*
	(0.073)	(0.117)	(0.044)	(0.080)	(0.036)	(0.054)
$Unemp_t$	0.055***	0.056***	0.056***	0.058***	0.057***	0.059***
	(0.000)	(0.000)	(0.000)	(0.000)	(0.000)	(0.000)
Obs.	427	427	427	427	427	427

p-value in parentheses
*** p<0.01, ** p<0.05, * p<0.1

Table B.35: Results of probit models with random effects for BB lending, controlling for credit boom periods

	Bank-to-Bank Lending					
	FC		**BCC**		**WCC**	
	(t)	**(t-1)**	**(t)**	**(t-1)**	**(t)**	**(t-1)**
Connectivity Measure						
$Ln(FC)$	-2.498***	-1.318***				
	(0.000)	(0.006)				
$Ln(BCC)$			-1.585***	-0.612		
			(0.000)	(0.121)		
$Ln(WCC)$					-1.964***	-0.509
					(0.001)	(0.415)
Control Variables						
$CreditBoom$	0.302	0.187	0.294	0.234	0.259	0.218
	(0.294)	(0.502)	(0.291)	(0.398)	(0.353)	(0.433)
$Ln(GDPpercap)_t$	3.840***	4.025***	4.244***	4.336***	4.288***	4.470***
	(0.000)	(0.000)	(0.000)	(0.000)	(0.000)	(0.000)
$Ln(PrivCredit/GDP)_t$	0.900***	1.035***	0.911***	1.002***	0.942***	1.008***
	(0.000)	(0.000)	(0.000)	(0.000)	(0.000)	(0.000)
HHI_t	0.726	1.573***	1.381**	1.685***	1.488***	1.752***
	(0.214)	(0.003)	(0.010)	(0.001)	(0.005)	(0.001)
HHI_{t-1}	-0.192	-0.220	0.012	0.235	0.169	0.323
	(0.732)	(0.704)	(0.982)	(0.661)	(0.751)	(0.544)
HHI_{t-2}	-0.118	-0.043	-0.013	0.163	0.113	0.268
	(0.830)	(0.937)	(0.980)	(0.760)	(0.831)	(0.610)
CAB_t	0.107*	0.099	0.113*	0.105*	0.111*	0.098
	(0.095)	(0.123)	(0.078)	(0.096)	(0.081)	(0.113)
CAB_{t-1}	-0.211***	-0.227***	-0.238***	-0.243***	-0.243***	-0.242***
	(0.001)	(0.000)	(0.000)	(0.000)	(0.000)	(0.000)
$REER_t$	0.032***	0.029***	0.030***	0.029***	0.030***	0.029***
	(0.003)	(0.006)	(0.006)	(0.008)	(0.006)	(0.009)
$M3/GDP_t$	-0.014**	-0.016***	-0.016***	-0.018***	-0.016***	-0.019***
	(0.015)	(0.006)	(0.006)	(0.002)	(0.004)	(0.001)
$Unemp_t$	0.337***	0.327***	0.352***	0.342***	0.349***	0.349***
	(0.000)	(0.000)	(0.000)	(0.000)	(0.000)	(0.000)
Obs.	427	427	427	427	427	427

p-value in parentheses
*** p<0.01, ** p<0.05, * p<0.1

Table B.36: Results of probit models with random effects for BB lending, controlling for capital inflow periods

	Bank-to-Bank Lending					
	FC		**BCC**		**WCC**	
	(t)	**(t-1)**	**(t)**	**(t-1)**	**(t)**	**(t-1)**
Connectivity Measure						
$Ln(FC)$	-2.501***	-1.366***				
	(0.000)	(0.004)				
$Ln(BCC)$			-1.592***	-0.624		
			(0.000)	(0.117)		
$Ln(WCC)$					-1.980***	-0.552
					(0.001)	(0.380)
Control Variables						
$CapitalInflow$	-0.342	0.236	-0.354	0.202	-0.322	0.194
	(0.206)	(0.355)	(0.191)	(0.429)	(0.231)	(0.447)
$Ln(GDPpercap)_t$	3.888***	3.886***	4.295***	4.199***	4.332***	4.329***
	(0.000)	(0.000)	(0.000)	(0.000)	(0.000)	(0.000)
$Ln(PrivCredit/GDP)_t$	0.918***	1.077***	0.930***	1.049***	0.960***	1.053***
	(0.000)	(0.000)	(0.000)	(0.000)	(0.000)	(0.000)
HHI_t	0.762	1.520***	1.431***	1.640***	1.526***	1.707***
	(0.191)	(0.004)	(0.008)	(0.002)	(0.004)	(0.001)
HHI_{t-1}	-0.268	-0.256	-0.056	0.232	0.108	0.314
	(0.630)	(0.660)	(0.918)	(0.665)	(0.839)	(0.556)
HHI_{t-2}	-0.228	-0.076	-0.120	0.131	0.019	0.238
	(0.676)	(0.888)	(0.823)	(0.805)	(0.972)	(0.650)
CAB_t	0.100	0.099	0.106*	0.105*	0.104	0.098
	(0.120)	(0.121)	(0.099)	(0.098)	(0.102)	(0.115)
CAB_{t-1}	-0.222***	-0.216***	-0.250***	-0.233***	-0.253***	-0.232***
	(0.001)	(0.001)	(0.000)	(0.000)	(0.000)	(0.000)
$REER_t$	0.034***	0.028***	0.032***	0.028**	0.032***	0.028**
	(0.002)	(0.008)	(0.004)	(0.011)	(0.004)	(0.012)
$M3/GDP_t$	-0.015**	-0.015***	-0.017***	-0.017***	-0.017***	-0.018***
	(0.012)	(0.007)	(0.004)	(0.003)	(0.003)	(0.001)
$Unemp_t$	0.327***	0.324***	0.341***	0.337***	0.339***	0.344***
	(0.000)	(0.000)	(0.000)	(0.000)	(0.000)	(0.000)
Obs.	427	427	427	427	427	427

p-value in parentheses
*** p<0.01, ** p<0.05, * p<0.1

APPENDIX C: Robustness Tests Results for EU Network

Table C.1: Probit model regression results controlling for Maastricht Criteria

	Bank-to-Bank		Bank-to-Non-Bank	
	WCC	**WCC-in**	**WCC**	**WCC-in**
Connectivity Measure				
$Ln(C_{t-1})$	0.291	0.268	-1.392	-1.365
	(0.826)	(0.840)	(0.439)	(0.448)
$Ln(C_{t-1}) * EU_t$	-0.150	-0.212	0.920	1.105
	(0.913)	(0.877)	(0.623)	(0.552)
$Ln(C_{t-1}) * EUZ_t$	-1.989***	-1.896***	-1.168*	-1.941***
	(0.003)	(0.004)	(0.094)	(0.009)
Control Variables				
EU_t	-0.609	-0.604	-0.526	-0.35
	(0.418)	(0.426)	(0.572)	(0.710)
EUZ_t	-0.206	0.274	0.242	0.178
	(0.731)	(0.600)	(0.697)	(0.730)
$Ln(GDPpercap)_{t-1}$	3.504*	3.477*	4.373**	4.068**
	(0.083)	(0.091)	(0.026)	(0.039)
$Ln(PrivCredit/GDP)_{t-1}$	1.548***	1.533***	1.342***	1.394***
	(0.000)	(0.000)	(0.002)	(0.001)
HHI_{t-1}	-0.036	0.148	0.852	0.826
	(0.950)	(0.793)	(0.123)	(0.149)
CAB_{t-1}	-0.046	-0.057	-0.058	-0.057
	(0.380)	(0.284)	(0.225)	(0.234)
CAB_{t-2}	-0.154**	-0.157***	-0.136***	-0.124***
	(0.010)	(0.009)	(0.004)	(0.010)
$REER_{t-1}$	0.025	0.021	0.024	0.019
	(0.180)	(0.252)	(0.203)	(0.304)
$Unemp_{t-1}$	0.211***	0.205***	0.226***	0.222***
	(0.000)	(0.001)	(0.000)	(0.000)
Maastricht Criteria				
Inf_{t-1}	0.246***	0.259***	0.220***	0.224***
	(0.002)	(0.001)	(0.007)	(0.006)
$Gov.Debt_{t-1}$	0.043***	0.043***	0.046***	0.045***
	(0.000)	(0.000)	(0.000)	(0.000)
$Interestrate_{t-1}$	-0.070	-0.066	-0.040	-0.015
	(0.427)	(0.455)	(0.667)	(0.874)
Obs.	340	333	344	337
Log-likelihood	-122.9	-121.5	-121.3	-116.7

p-value in parentheses
*** p<0.01, ** p<0.05, * p<0.1

Table C.2: Probit model regression results for BB lending market alternative pre-crisis definitions

PreGFC Definition	**1999-2007**		**2000-2007**		**2001-2007**		**2002-2007**	
	WCC	**WCC-in**	**WCC**	**WCC-in**	**WCC**	**WCC-in**	**WCC**	**WCC-in**
$Ln(C_{t-1}) * PreGFC$	3.030***	3.440***	3.419***	3.590***	4.043***	4.097***	1.112**	1.107**
	(0.001)	(0.000)	(0.001)	(0.000)	(0.005)	(0.004)	(0.019)	(0.017)
$Ln(C_{t-1}) * PreGFC * EU_t$	-0.657	0.607	-2.224	-0.913	-5.234	-4.122	-3.936	-3.881
	(0.536)	(0.644)	(0.115)	(0.564)	(0.172)	(0.163)	(0.199)	(0.148)
$Ln(C_{t-1}) * PreGFC * EUZ_t$	0.749	0.218	0.542	0.168	-0.445	-0.759	-1.100	-1.239
	(0.317)	(0.859)	(0.453)	(0.854)	(0.582)	(0.538)	(0.220)	(0.335)

	2003-2007		**2005-2007**		**2006-2007**	
	WCC	**WCC-in**	**WCC**	**WCC-in**	**WCC**	**WCC-in**
$Ln(C_{t-1}) * PreGFC$	4.638**	4.631**	4.113	4.099	1.911	1.944
	(0.026)	(0.023)	(0.103)	(0.108)	(0.648)	(0.637)
$Ln(C_{t-1}) * PreGFC * EU_t$	-5.610	-4.606	-3.524	-2.823	-0.176	0.131
	(0.156)	(0.242)	(0.370)	(0.475)	(0.767)	(0.794)
$Ln(C_{t-1}) * PreGFC * EUZ_t$	-0.792	-1.231	1.537	0.155	1.549	0.675
	(0.395)	(0.336)	(0.268)	(0.870)	(0.261)	(0.635)

p-value in parentheses

*** p<0.01, ** p<0.05, * p<0.1

Table C.3: Probit model regression results for BB lending market, estimated with connectivity measures from global lending network

	WCC	**WCC**	**WCC**	**WCC**
Models	(1)	(2)	(3)	(4)
Connectivity Measure				
$Ln(C_{t-1})$	-0.515**	-0.037	0.197	0.467
	(0.040)	(0.932)	(0.645)	(0.284)
$Ln(C_{t-1}) * EU_t$		-0.595	-0.776*	-0.763*
		(0.166)	(0.073)	(0.082)
$Ln(C_{t-1}) * EUZ_t$			-0.499**	-0.724***
			(0.019)	(0.002)
$Ln(C_{t-1}) * PreGFC$				4.959*
				(0.096)
$Ln(C_{t-1}) * EU_t * PreGFC$				-4.059
				(0.148)
$Ln(C_{t-1}) * EUZ_t * PreGFC$				0.118
				(0.774)
Control Variables				
EU_t		-0.049	0.119	-0.042
		(0.882)	(0.724)	(0.904)
EUZ_t			0.060	0.044
			(0.853)	(0.894)
$Ln(GDPpercap)_{t-1}$	-0.456	-0.929	-2.207***	-1.805**
	(0.380)	(0.148)	(0.004)	(0.021)
$Ln(PrivCredit/GDP)_{t-1}$	0.233	0.211	0.410*	0.467**
	(0.248)	(0.299)	(0.053)	(0.032)
HHI_{t-1}	0.255	0.291	0.302	0.072
	(0.430)	(0.373)	(0.361)	(0.835)
CAB_{t-1}	0.026	0.023	0.022	0.027
	(0.309)	(0.369)	(0.387)	(0.292)
CAB_{t-2}	-0.084***	-0.083***	-0.081***	-0.081***
	(0.002)	(0.002)	(0.003)	(0.004)
$REER_{t-1}$	-0.020***	-0.015*	-0.005	-0.003
	(0.004)	(0.074)	(0.588)	(0.750)
$M3/GDP_{t-1}$	0.033***	0.036***	0.032***	0.029***
	(0.000)	(0.000)	(0.000)	(0.000)
$Unemp_{t-1}$	0.046**	0.032	0.022	0.032
	(0.045)	(0.194)	(0.397)	(0.224)
Obs.	593	593	593	593

p-value in parentheses

*** p<0.01, ** p<0.05, * p<0.1

Table C.4: Probit model regression results for BNB lending market, estimated with connectivity measures from global lending network

	WCC	**WCC**	**WCC**	**WCC**
Models	(1)	(2)	(3)	(4)
Connectivity Measure				
$Ln(C_{t-1})$	-0.295	-0.052	0.037	0.396
	(0.157)	(0.880)	(0.915)	(0.269)
$Ln(C_{t-1}) * EU_t$		-0.304	-0.419	-0.523
		(0.376)	(0.228)	(0.137)
$Ln(C_{t-1}) * EUZ_t$			0.057	-0.178
			(0.784)	(0.447)
$Ln(C_{t-1}) * PreGFC$				5.810**
				(0.043)
$Ln(C_{t-1}) * EU_t * PreGFC$				-4.865*
				(0.071)
$Ln(C_{t-1}) * EUZ_t * PreGFC$				1.270*
				(0.084)
Control Variables				
EU_t		0.028	0.115	-0.054
		(0.928)	(0.715)	(0.867)
EUZ_t			0.655**	0.746**
			(0.020)	(0.012)
$Ln(GDPpercap)_{t-1}$	-0.572	-0.940	-1.878***	-1.693**
	(0.248)	(0.125)	(0.008)	(0.021)
$Ln(PrivCredit/GDP)_{t-1}$	0.210	0.200	0.287	0.364*
	(0.285)	(0.312)	(0.158)	(0.083)
HHI_{t-1}	-0.178	-0.143	-0.114	-0.362
	(0.548)	(0.634)	(0.704)	(0.250)
CAB_{t-1}	0.016	0.015	0.018	0.022
	(0.480)	(0.495)	(0.416)	(0.336)
CAB_{t-2}	-0.049**	-0.049**	-0.047**	-0.038*
	(0.030)	(0.028)	(0.037)	(0.096)
$REER_{t-1}$	-0.014**	-0.011	-0.005	-0.001
	(0.034)	(0.164)	(0.550)	(0.886)
$M3/GDP_{t-1}$	0.036***	0.038***	0.035***	0.033***
	(0.000)	(0.000)	(0.000)	(0.000)
$Unemp_{t-1}$	0.037*	0.026	0.013	0.008
	(0.087)	(0.262)	(0.592)	(0.741)
Obs.	602	602	602	602

p-value in parentheses

*** p<0.01, ** p<0.05, * p<0.1

Table C.5: Probit model regression results controlling for "$EU_t.PreGFC$" and "$EUZ_t.PreGFC$" dummy variables

	Bank-to-Bank		Bank-to-Non-Bank	
	WCC	**WCC-in**	**WCC**	**WCC-in**
Connectivity Measure				
$Ln(C_{t-1})$	-0.784	-0.906*	0.321	0.306
	(0.148)	(0.090)	(0.505)	(0.520)
$Ln(C_{t-1}) * EU_t$	1.199**	1.080*	-0.090	-0.168
	(0.043)	(0.067)	(0.875)	(0.763)
$Ln(C_{t-1}) * EUZ_t$	-1.806***	-1.636***	-1.608***	-1.687***
	(0.000)	(0.002)	(0.002)	(0.004)
$Ln(C_{t-1}) * PreGFC$	3.672*	3.680**	4.596**	4.626**
	(0.052)	(0.047)	(0.048)	(0.048)
$Ln(C_{t-1}) * EU_t * PreGFC$	-4.446	-3.615	-3.382	-3.753
	(0.239)	(0.388)	(0.103)	(0.111)
$Ln(C_{t-1}) * EUZ_t * PreGFC$	-1.091	-4.240	1.004	-1.159
	(0.661)	(0.155)	(0.615)	(0.707)
Control Variables				
EU_t	0.877**	0.734**	0.361	0.354
	(0.027)	(0.049)	(0.379)	(0.344)
EUZ_t	-0.514	-0.061	-0.289	-0.036
	(0.236)	(0.867)	(0.500)	(0.924)
$EU_t * PreGFC$	-0.333	-0.228	-0.849	-1.047
	(0.638)	(0.774)	(0.168)	(0.125)
$EUZ_t * PreGFC$	-0.619	-1.950*	0.343	-0.669
	(0.645)	(0.085)	(0.747)	(0.526)
$Ln(GDPpercap)_{t-1}$	-0.985	-0.808	-1.281*	-1.135
	(0.231)	(0.327)	(0.089)	(0.133)
$Ln(PrivCredit/GDP)_{t-1}$	0.530**	0.420*	0.466**	0.339
	(0.021)	(0.069)	(0.030)	(0.113)
HHI_{t-1}	0.017	-0.170	-0.462	-0.489
	(0.962)	(0.659)	(0.181)	(0.171)
CAB_{t-1}	0.019	0.016	0.013	0.007
	(0.565)	(0.635)	(0.583)	(0.774)
CAB_{t-2}	-0.073**	-0.072**	-0.030	-0.029
	(0.027)	(0.030)	(0.198)	(0.216)
$REER_{t-1}$	-0.018**	-0.020**	-0.007	-0.010
	(0.021)	(0.013)	(0.371)	(0.172)
$M3/GDP_{t-1}$	0.026***	0.026***	0.028***	0.029***
	(0.000)	(0.000)	(0.000)	(0.000)
$Unemp_{t-1}$	0.042	0.035	0.026	0.023
	(0.138)	(0.213)	(0.325)	(0.364)
Obs.	579	566	587	577

p-value in parentheses

*** p<0.01, ** p<0.05, * p<0.1

APPENDIX D: Global Lending Network Regression Results

Table D.1: Results of probit models for BB lending market controlling for credit boom periods

	Bank-to-Bank Lending					
	(1)	(2)	(3)	(4)	(5)	(6)
Connectivity Measure						
$Ln(FC)$	-0.610*	0.297				
	(0.061)	(0.366)				
$Ln(BCC)$			0.050	0.296**		
			(0.678)	(0.018)		
$Ln(WCC)$					0.136	0.324**
					(0.406)	(0.050)
Control Variables						
$CreditBoom$	0.321***	0.111	0.296**	0.128	0.297**	0.134
	(0.004)	(0.313)	(0.012)	(0.273)	(0.012)	(0.250)
$Ln(GDPpercapita)_t$	-1.127***	-1.321***	-1.399***	-1.189***	-1.392***	-1.213***
	(0.000)	(0.000)	(0.000)	(0.000)	(0.000)	(0.000)
$Ln(PrivCredit/GDP)_t$	0.567***	0.560***	0.655***	0.631***	0.659***	0.618***
	(0.000)	(0.000)	(0.000)	(0.000)	(0.000)	(0.000)
HHI_t	1.076***	1.147***	1.107***	1.307***	1.105***	1.294***
	(0.000)	(0.000)	(0.000)	(0.000)	(0.000)	(0.000)
HHI_{t-1}	0.545***	0.568***	0.607***	0.663***	0.607***	0.641***
	(0.003)	(0.002)	(0.002)	(0.001)	(0.002)	(0.002)
HHI_{t-2}	0.412**	0.376**	0.392**	0.484**	0.395**	0.471**
	(0.026)	(0.041)	(0.048)	(0.015)	(0.047)	(0.018)
CAB_t	0.030***	0.027***	0.029**	0.030***	0.029**	0.030***
	(0.004)	(0.008)	(0.020)	(0.007)	(0.019)	(0.007)
CAB_{t-1}	-0.010	-0.011	-0.007	-0.013	-0.007	-0.013
	(0.333)	(0.287)	(0.567)	(0.278)	(0.553)	(0.273)
$M3/GDP_t$	-0.008***	-0.008***	-0.008***	-0.010***	-0.008***	-0.010***
	(0.000)	(0.000)	(0.000)	(0.000)	(0.000)	(0.000)
Observations	3,414	3,414	2,959	2,943	2,959	2,943

p-value in parentheses
*** p<0.01, ** p<0.05, * p<0.1

Table D.2: Results of probit models for BNB lending market controlling for credit boom periods

	Bank-to-Non-Bank Lending					
	(1)	(2)	(3)	(4)	(5)	(6)
Connectivity Measure						
$Ln(FC)$	-0.111	0.488				
	(0.724)	(0.122)				
$Ln(BCC)$			-0.061	-0.044		
			(0.578)	(0.690)		
$Ln(WCC)$					-0.034	0.198
					(0.804)	(0.160)
Control Variables						
$CreditBoom$	0.222**	0.156	0.250**	0.108	0.248**	0.101
	(0.043)	(0.144)	(0.033)	(0.352)	(0.033)	(0.384)
$Ln(GDPpercapita)_t$	-1.013***	-1.244***	-1.095***	-1.122***	-1.088***	-1.119***
	(0.000)	(0.000)	(0.000)	(0.000)	(0.000)	(0.000)
$Ln(PrivCredit/GDP)_t$	0.498***	0.481***	0.503***	0.544***	0.505***	0.572***
	(0.000)	(0.000)	(0.000)	(0.000)	(0.000)	(0.000)
HHI_t	0.868***	0.892***	0.747***	0.910***	0.747***	0.904***
	(0.000)	(0.000)	(0.000)	(0.000)	(0.000)	(0.000)
HHI_{t-1}	0.598***	0.636***	0.730***	0.686***	0.730***	0.688***
	(0.001)	(0.001)	(0.000)	(0.001)	(0.000)	(0.001)
HHI_{t-2}	0.453**	0.478**	0.436**	0.476**	0.436**	0.473**
	(0.015)	(0.010)	(0.028)	(0.016)	(0.028)	(0.016)
CAB_t	0.044***	0.042***	0.041***	0.047***	0.041***	0.049***
	(0.000)	(0.000)	(0.000)	(0.000)	(0.000)	(0.000)
CAB_{t-1}	-0.016	-0.017*	-0.011	-0.014	-0.011	-0.014
	(0.104)	(0.094)	(0.283)	(0.204)	(0.282)	(0.183)
$M3/GDP_t$	-0.010***	-0.010***	-0.011***	-0.013***	-0.011***	-0.013***
	(0.000)	(0.000)	(0.000)	(0.000)	(0.000)	(0.000)
Observations	3,769	3,769	3,383	3,378	3,383	3,378

p-value in parentheses
*** p<0.01, ** p<0.05, * p<0.1

Table D.3: Results of probit models for BB lending market with interaction between connectivity and emerging country dummy variable, controlling for credit boom periods

	Bank-to-Bank Lending					
	(1)	(2)	(3)	(4)	(5)	(6)
Connectivity Measure						
$Ln(FC)$	-0.02	1.006**				
	(0.960)	(0.010)				
$Ln(BCC)$			-0.397**	-0.030		
			(0.012)	(0.850)		
$Ln(WCC)$					-0.320	0.040
					(0.115)	(0.846)
Interaction Variables						
$Ln(FC) * Emerging$	-1.619***	-2.042***				
	(0.010)	(0.001)				
$Ln(BCC) * Emerging$			1.044***	0.793***		
			(0.000)	(0.002)		
$Ln(WCC) * Emerging$					1.250***	0.781**
					(0.000)	(0.024)
Control Variables						
$CreditBoom$	0.330***	0.119	0.304**	0.141	0.291**	0.137
	(0.003)	(0.276)	(0.011)	(0.227)	(0.014)	(0.241)
$Ln(GDPpercapita)_t$	-1.074***	-1.250***	-1.242***	-1.090***	-1.256***	-1.141***
	(0.000)	(0.000)	(0.000)	(0.000)	(0.000)	(0.000)
$Ln(PrivCredit/GDP)_t$	0.545***	0.535***	0.623***	0.615***	0.635***	0.607***
	(0.000)	(0.000)	(0.000)	(0.000)	(0.000)	(0.000)
HHI_t	1.064***	1.159***	1.081***	1.281***	1.079***	1.272***
	(0.000)	(0.000)	(0.000)	(0.000)	(0.000)	(0.000)
HHI_{t-1}	0.538***	0.560***	0.631***	0.656***	0.626***	0.634***
	(0.003)	(0.002)	(0.001)	(0.002)	(0.002)	(0.002)
HHI_{t-2}	0.420**	0.369**	0.372*	0.485**	0.376*	0.476**
	(0.024)	(0.045)	(0.063)	(0.015)	(0.060)	(0.017)
CAB_t	0.029***	0.027***	0.028**	0.028**	0.028**	0.029***
	(0.005)	(0.008)	(0.026)	(0.010)	(0.025)	(0.008)
CAB_{t-1}	-0.011	-0.013	-0.008	-0.014	-0.008	-0.014
	(0.281)	(0.204)	(0.509)	(0.249)	(0.509)	(0.249)
$M3/GDP_t$	-0.008***	-0.008***	-0.008***	-0.010***	-0.008***	-0.010***
	(0.000)	(0.000)	(0.000)	(0.000)	(0.000)	(0.000)
Observations	3,414	3,414	2,959	2,943	2,959	2,943

p-value in parentheses
*** p<0.01, ** p<0.05, * p<0.1

Table D.4: Results of probit models for BNB lending market with interaction between connectivity and emerging country dummy variable, controlling for credit boom periods

	Bank-to-Non-Bank Lending					
	(1)	(2)	(3)	(4)	(5)	(6)
Connectivity Measure						
$Ln(FC)$	0.386	1.164***				
	(0.266)	(0.001)				
$Ln(BCC)$			-0.321**	-0.198		
			(0.017)	(0.141)		
$Ln(WCC)$					-0.158	0.092
					(0.334)	(0.576)
Interaction Variables						
$Ln(FC) * Emerging$	-1.709***	-2.373***				
	(0.001)	(0.000)				
$Ln(BCC) * Emerging$			0.740***	0.443*		
			(0.001)	(0.052)		
$Ln(WCC) * Emerging$					0.416	0.372
					(0.166)	(0.229)
Control Variables						
$CreditBoom$	0.222**	0.164	0.251**	0.109	0.251**	0.103
	(0.043)	(0.124)	(0.032)	(0.348)	(0.032)	(0.373)
$Ln(GDPpercapita)_t$	-0.853***	-1.020***	-1.029***	-1.090***	-1.058***	-1.100***
	(0.001)	(0.000)	(0.000)	(0.000)	(0.000)	(0.000)
$Ln(PrivCredit/GDP)_t$	0.455***	0.423***	0.480***	0.537***	0.496***	0.568***
	(0.000)	(0.000)	(0.000)	(0.000)	(0.000)	(0.000)
HHI_t	0.828***	0.866***	0.723***	0.902***	0.740***	0.898***
	(0.000)	(0.000)	(0.001)	(0.000)	(0.000)	(0.000)
HHI_{t-1}	0.562***	0.581***	0.733***	0.677***	0.731***	0.686***
	(0.002)	(0.002)	(0.000)	(0.001)	(0.000)	(0.001)
HHI_{t-2}	0.420**	0.422**	0.428**	0.470**	0.436**	0.472**
	(0.024)	(0.024)	(0.032)	(0.017)	(0.028)	(0.017)
CAB_t	0.043***	0.042***	0.043***	0.047***	0.042***	0.049***
	(0.000)	(0.000)	(0.000)	(0.000)	(0.000)	(0.000)
CAB_{t-1}	-0.016	-0.018*	-0.014	-0.014	-0.012	-0.014
	(0.103)	(0.075)	(0.191)	(0.201)	(0.247)	(0.178)
$M3/GDP_t$	-0.009***	-0.010***	-0.011***	-0.013***	-0.011***	-0.013***
	(0.000)	(0.000)	(0.000)	(0.000)	(0.000)	(0.000)
Observations	3,769	3,769	3,383	3,378	3,383	3,378

p-value in parentheses
*** p<0.01, ** p<0.05, * p<0.1

Table D.5: Results of probit models for BB lending market controlling for capital inflow periods

	Bank-to-Bank Lending					
	(1)	(2)	(3)	(4)	(5)	(6)
Connectivity Measure						
$Ln(FC)$	-0.661**	0.275				
	(0.041)	(0.401)				
$Ln(BCC)$			0.049	0.294**		
			(0.687)	(0.019)		
$Ln(WCC)$					0.129	0.313*
					(0.432)	(0.060)
Control Variables						
$CapitalInflow$	0.108	0.242**	0.107	0.286***	0.105	0.285***
	(0.286)	(0.014)	(0.316)	(0.007)	(0.325)	(0.007)
$Ln(GDPpercapita)_t$	-1.147***	-1.287***	-1.428***	-1.150***	-1.423***	-1.176***
	(0.000)	(0.000)	(0.000)	(0.000)	(0.000)	(0.000)
$Ln(PrivCredit/GDP)_t$	0.576***	0.554***	0.664***	0.621***	0.667***	0.609***
	(0.000)	(0.000)	(0.000)	(0.000)	(0.000)	(0.000)
HHI_t	1.096***	1.152***	1.129***	1.312***	1.128***	1.299***
	(0.000)	(0.000)	(0.000)	(0.000)	(0.000)	(0.000)
HHI_{t-1}	0.526***	0.584***	0.594***	0.682***	0.593***	0.660***
	(0.004)	(0.002)	(0.002)	(0.001)	(0.003)	(0.001)
HHI_{t-2}	0.378**	0.382**	0.365*	0.487**	0.367*	0.473**
	(0.040)	(0.038)	(0.066)	(0.015)	(0.064)	(0.017)
CAB_t	0.030***	0.026**	0.028**	0.028***	0.028**	0.029***
	(0.005)	(0.011)	(0.029)	(0.009)	(0.028)	(0.009)
CAB_{t-1}	-0.009	-0.003	-0.005	-0.003	-0.005	-0.003
	(0.421)	(0.786)	(0.692)	(0.819)	(0.679)	(0.803)
$M3/GDP_t$	-0.007***	-0.007***	-0.007***	-0.010***	-0.008***	-0.010***
	(0.000)	(0.000)	(0.000)	(0.000)	(0.000)	(0.000)
Observations	3,414	3,414	2,959	2,943	2,959	2,943

p-value in parentheses
*** p<0.01, ** p<0.05, * p<0.1

Table D.6: Results of probit models for BNB lending market controlling for capital inflow periods

	Bank-to-Non-Bank Lending					
	(1)	(2)	(3)	(4)	(5)	(6)
Connectivity Measure						
$Ln(FC)$	-0.135	0.475				
	(0.668)	(0.133)				
$Ln(BCC)$			-0.072	-0.072		
			(0.514)	(0.514)		
$Ln(WCC)$					-0.055	0.15
					(0.692)	(0.288)
Control Variables						
$CapitalInflow$	0.109	0.308***	0.181*	0.361***	0.180*	0.345***
	(0.263)	(0.001)	(0.079)	(0.000)	(0.083)	(0.001)
$Ln(GDPpercapita)_t$	-1.010***	-1.200***	-1.097***	-1.081***	-1.090***	-1.077***
	(0.000)	(0.000)	(0.000)	(0.000)	(0.000)	(0.000)
$Ln(PrivCredit/GDP)_t$	0.503***	0.473***	0.506***	0.533***	0.507***	0.559***
	(0.000)	(0.000)	(0.000)	(0.000)	(0.000)	(0.000)
HHI_t	0.880***	0.892***	0.753***	0.897***	0.752***	0.892***
	(0.000)	(0.000)	(0.000)	(0.000)	(0.000)	(0.000)
HHI_{t-1}	0.602***	0.669***	0.732***	0.713***	0.731***	0.712***
	(0.001)	(0.000)	(0.000)	(0.001)	(0.000)	(0.001)
HHI_{t-2}	0.460**	0.495***	0.452**	0.494**	0.452**	0.490**
	(0.013)	(0.008)	(0.023)	(0.013)	(0.023)	(0.013)
CAB_t	0.045***	0.041***	0.046***	0.046***	0.046***	0.048***
	(0.000)	(0.000)	(0.000)	(0.000)	(0.000)	(0.000)
CAB_{t-1}	-0.016	-0.008	-0.012	-0.002	-0.012	-0.003
	(0.111)	(0.468)	(0.272)	(0.892)	(0.269)	(0.805)
$M3/GDP_t$	-0.009***	-0.009***	-0.010***	-0.013***	-0.010***	-0.013***
	(0.000)	(0.000)	(0.000)	(0.000)	(0.000)	(0.000)
Observations	3,769	3,769	3,383	3,378	3,383	3,378

p-value in parentheses
*** p<0.01, ** p<0.05, * p<0.1

Table D.7: Results of probit models for BB lending market with interaction between connectivity and emerging country dummy variable, controlling for capital inflow periods

	Bank-to-Bank Lending					
	(1)	(2)	(3)	(4)	(5)	(6)
Connectivity Measure						
$Ln(FC)$	-0.102	0.956**				
	(0.795)	(0.015)				
$Ln(BCC)$			-0.397**	-0.034		
			(0.012)	(0.833)		
$Ln(WCC)$					-0.334	0.023
					(0.100)	(0.910)
Interaction Variables						
$Ln(FC) * Emerging$	-1.533**	-1.968***				
	(0.014)	(0.002)				
$Ln(BCC) * Emerging$			1.046***	0.798***		
			(0.000)	(0.002)		
$Ln(WCC) * Emerging$					1.281***	0.794**
					(0.000)	(0.023)
Control Variables						
$CapitalInflow$	0.098	0.231**	0.121	0.293***	0.118	0.289***
	(0.330)	(0.019)	(0.260)	(0.006)	(0.275)	(0.006)
$Ln(GDPpercapita)_t$	-1.099***	-1.220***	-1.269***	-1.050***	-1.281***	-1.102***
	(0.000)	(0.000)	(0.000)	(0.000)	(0.000)	(0.000)
$Ln(PrivCredit/GDP)_t$	0.555***	0.531***	0.632***	0.604***	0.643***	0.597***
	(0.000)	(0.000)	(0.000)	(0.000)	(0.000)	(0.000)
HHI_t	1.085***	1.165***	1.102***	1.285***	1.099***	1.276***
	(0.000)	(0.000)	(0.000)	(0.000)	(0.000)	(0.000)
HHI_{t-1}	0.518***	0.576***	0.620***	0.676***	0.612***	0.654***
	(0.005)	(0.002)	(0.002)	(0.001)	(0.002)	(0.002)
HHI_{t-2}	0.384**	0.374**	0.344*	0.487**	0.350*	0.477**
	(0.038)	(0.043)	(0.085)	(0.015)	(0.079)	(0.017)
CAB_t	0.029***	0.026**	0.027**	0.027**	0.028**	0.028**
	(0.008)	(0.011)	(0.034)	(0.013)	(0.032)	(0.011)
CAB_{t-1}	-0.009	-0.006	-0.006	-0.004	-0.006	-0.004
	(0.372)	(0.618)	(0.626)	(0.773)	(0.618)	(0.769)
$M3/GDP_t$	-0.007***	-0.007***	-0.007***	-0.010***	-0.007***	-0.010***
	(0.000)	(0.000)	(0.000)	(0.000)	(0.000)	(0.000)
Observations	3,414	3,414	2,959	2,943	2,959	2,943

p-value in parentheses
*** p<0.01, ** p<0.05, * p<0.1

Table D.8: Results of probit models for BNB lending market with interaction between connectivity and emerging country dummy variable, controlling for capital inflow periods

	Bank-to-Non-Bank Lending					
	(1)	(2)	(3)	(4)	(5)	(6)
Connectivity Measure						
$Ln(FC)$	0.353	1.127***				
	(0.308)	(0.001)				
$Ln(BCC)$			-0.338**	-0.241*		
			(0.012)	(0.075)		
$Ln(WCC)$					-0.184	0.032
					(0.264)	(0.846)
Interaction Variables						
$Ln(FC) * Emerging$	-1.680***	-2.295***				
	(0.001)	(0.000)				
$Ln(BCC) * Emerging$			0.756***	0.482**		
			(0.001)	(0.035)		
$Ln(WCC) * Emerging$					0.430	0.412
					(0.152)	(0.183)
Control Variables						
$CapitalInflow$	0.093	0.292***	0.196*	0.372***	0.187*	0.351***
	(0.343)	-(0.002)	(0.060)	(0.000)	(0.072)	(0.000)
$Ln(GDPpercapita)_t$	-0.854***	-0.985***	-1.029***	-1.044***	-1.059***	-1.055***
	(0.001)	(0.000)	(0.000)	(0.000)	(0.000)	(0.000)
$Ln(PrivCredit/GDP)_t$	0.461***	0.418***	0.483***	0.525***	0.497***	0.554***
	(0.000)	(0.000)	(0.000)	(0.000)	(0.000)	(0.000)
HHI_t	0.840***	0.867***	0.728***	0.889***	0.745***	0.886***
	(0.000)	(0.000)	(0.001)	(0.000)	(0.000)	(0.000)
HHI_{t-1}	0.567***	0.616***	0.735***	0.705***	0.733***	0.711***
	(0.002)	(0.001)	(0.000)	(0.001)	(0.000)	(0.001)
HHI_{t-2}	0.427**	0.440**	0.444**	0.489**	0.451**	0.489**
	(0.022)	(0.019)	(0.026)	(0.014)	(0.024)	(0.014)
CAB_t	0.044***	0.041***	0.048***	0.045***	0.046***	0.048***
	(0.000)	(0.000)	(0.000)	(0.000)	(0.000)	(0.000)
CAB_{t-1}	-0.016	-0.009	-0.014	-0.001	-0.013	-0.003
	(0.110)	(0.382)	(0.179)	(0.911)	(0.235)	(0.806)
$M3/GDP_t$	-0.009***	-0.009***	-0.010***	-0.013***	-0.011***	-0.013***
	(0.000)	(0.000)	(0.000)	(0.000)	(0.000)	(0.000)
Observations	3,769	3,769	3,383	3,378	3,383	3,378

p-value in parentheses
*** p<0.01, ** p<0.05, * p<0.1

Table D.9: Results of probit models for BB lending with interaction variable between credit boom periods and connectivity measures

	Bank-to-Bank Lending					
	(1)	(2)	(3)	(4)	(5)	(6)
Connectivity Measure						
$Ln(FC)$	-0.777**	0.198				
	(0.023)	(0.563)				
$Ln(BCC)$			0.032	0.291**		
			(0.792)	(0.021)		
$Ln(WCC)$					0.118	0.319*
					(0.473)	(0.055)
Interaction Variables						
$Ln(FC) * CreditBoom$	1.818*	1.058				
	(0.080)	(0.306)				
$Ln(BCC) * CreditBoom$			0.140	0.036		
			(0.305)	(0.788)		
$Ln(WCC) * CreditBoom$					0.155	0.042
					(0.343)	(0.791)
Control Variables						
$CreditBoom$	3.018**	1.673	0.427**	0.161	0.384***	0.159
	(0.050)	(0.274)	(0.014)	(0.341)	(0.010)	(0.283)
$Ln(GDPpercapita)_t$	-1.118***	-1.311***	-1.397***	-1.189***	-1.389***	-1.212***
	(0.000)	(0.000)	(0.000)	(0.000)	(0.000)	(0.000)
$Ln(PrivCredit/GDP)_t$	0.570***	0.561***	0.654***	0.631***	0.657***	0.618***
	(0.000)	(0.000)	(0.000)	(0.000)	(0.000)	(0.000)
HHI_t	1.097***	1.150***	1.115***	1.308***	1.111***	1.296***
	(0.000)	(0.000)	(0.000)	(0.000)	(0.000)	(0.000)
HHI_{t-1}	0.560***	0.579***	0.605***	0.664***	0.608***	0.642***
	(0.002)	(0.002)	(0.002)	(0.001)	(0.002)	(0.002)
HHI_{t-2}	0.418**	0.387**	0.386*	0.484**	0.387*	0.471**
	(0.024)	(0.036)	(0.052)	(0.015)	(0.052)	(0.018)
CAB_t	0.031***	0.027***	0.029**	0.030***	0.030**	0.030***
	(0.003)	(0.009)	(0.018)	(0.008)	(0.016)	(0.007)
CAB_{t-1}	-0.010	-0.011	-0.007	-0.013	-0.008	-0.013
	(0.335)	(0.319)	(0.548)	(0.282)	(0.526)	(0.276)
$M3/GDP_t$	-0.008***	-0.008***	-0.008***	-0.010***	-0.008***	-0.010***
	(0.000)	(0.000)	(0.000)	(0.000)	(0.000)	(0.000)
Observations	3,414	3,414	2,959	2,943	2,959	2,943

p-value in parentheses
*** p<0.01, ** p<0.05, * p<0.1

Table D.10: Results of probit models for BNB lending with interaction variable between credit boom periods and connectivity measures

	Bank-to-Non-Bank Lending					
	(1)	(2)	(3)	(4)	(5)	(6)
Connectivity Measure						
$Ln(FC)$	-0.116	0.490				
	(0.718)	(0.132)				
$Ln(BCC)$			-0.071	-0.039		
			(0.519)	(0.721)		
$Ln(WCC)$					-0.044	0.201
					(0.753)	(0.157)
Interaction Variables						
$Ln(FC) * CreditBoom$	0.063	-0.019				
	(0.939)	(0.981)				
$Ln(BCC) * CreditBoom$			0.111	-0.045		
			(0.430)	(0.743)		
$Ln(WCC) * CreditBoom$					0.103	-0.028
					(0.530)	(0.860)
Control Variables						
$CreditBoom$	0.311	0.129	0.351**	0.066	0.303**	0.086
	(0.792)	(0.909)	(0.042)	(0.705)	(0.036)	(0.553)
$Ln(GDPpercapita)_t$	-1.014***	-1.244***	-1.095***	-1.122***	-1.087***	-1.119***
	(0.000)	(0.000)	(0.000)	(0.000)	(0.000)	(0.000)
$Ln(PrivCredit/GDP)_t$	0.499***	0.481***	0.505***	0.543***	0.506***	0.572***
	(0.000)	(0.000)	(0.000)	(0.000)	(0.000)	(0.000)
HHI_t	0.868***	0.892***	0.754***	0.908***	0.752***	0.903***
	(0.000)	(0.000)	(0.000)	(0.000)	(0.000)	(0.000)
HHI_{t-1}	0.598***	0.635***	0.725***	0.684***	0.726***	0.687***
	(0.001)	(0.001)	(0.000)	(0.001)	(0.000)	(0.001)
HHI_{t-2}	0.453**	0.478**	0.438**	0.478**	0.438**	0.475**
	(0.015)	(0.010)	(0.028)	(0.015)	(0.028)	(0.016)
CAB_t	0.044***	0.042***	0.042***	0.048***	0.041***	0.049***
	(0.000)	(0.000)	(0.000)	(0.000)	(0.000)	(0.000)
CAB_{t-1}	-0.016	-0.017*	-0.012	-0.014	-0.011	-0.014
	(0.104)	(0.094)	(0.279)	(0.202)	(0.280)	(0.181)
$M3/GDP_t$	-0.010***	-0.010***	-0.011***	-0.013***	-0.011***	-0.013***
	(0.000)	(0.000)	(0.000)	(0.000)	(0.000)	(0.000)
Observations	3,769	3,769	3,383	3,378	3,383	3,378

p-value in parentheses
*** p<0.01, ** p<0.05, * p<0.1

Table D.11: Results of probit models for BB lending with interaction variable between connectivity, credit boom periods and emerging country dummy variable

	Bank-to-Bank Lending					
	(1)	(2)	(3)	(4)	(5)	(6)
Connectivity Measure						
$Ln(FC)$	-0.200	0.887**				
	(0.624)	(0.029)				
$Ln(BCC)$			-0.403**	-0.020		
			(0.011)	(0.899)		
$Ln(WCC)$					-0.328	0.041
					(0.107)	(0.841)
Interaction Variables						
$Ln(FC) * E$	-1.589**	-2.021***				
	(0.012)	(0.002)				
$Ln(BCC) * E$			1.068***	0.862***		
			(0.000)	(0.001)		
$Ln(WCC) * E$					1.285***	0.883**
					(0.000)	(0.017)
$Ln(FC) * Boom$	1.790*	1.134				
	(0.086)	(0.278)				
$Ln(BCC) * Boom$			0.105	-0.007		
			(0.452)	(0.959)		
$Ln(WCC) * Boom$					0.126	0.016
					(0.443)	(0.922)
$Ln(FC) * Boom * E$	-0.046	-0.100				
	(0.753)	(0.497)				
$Ln(BCC) * Boom * E$			-0.222	-0.440		
			(0.541)	(0.218)		
$Ln(WCC) * Boom * E$					-0.343	-0.563
					(0.621)	(0.364)
Control Variables						
$Boom$	2.955*	1.727	0.353*	0.039	0.335**	0.099
	(0.056)	(0.262)	(0.080)	(0.844)	(0.038)	(0.535)
$Ln(GDPpercapita)_t$	-1.064***	-1.235***	-1.236***	-1.077***	-1.250***	-1.133***
	(0.000)	(0.000)	(0.000)	(0.000)	(0.000)	(0.000)
$Ln(PrivCredit/GDP)_t$	0.549***	0.533***	0.626***	0.617***	0.637***	0.611***
	(0.000)	(0.000)	(0.000)	(0.000)	(0.000)	(0.000)
HHI_t	1.086***	1.164***	1.088***	1.281***	1.084***	1.264***
	(0.000)	(0.000)	(0.000)	(0.000)	(0.000)	(0.000)
HHI_{t-1}	0.552***	0.573***	0.632***	0.656***	0.626***	0.633***
	(0.003)	(0.002)	(0.001)	(0.002)	(0.002)	(0.002)
HHI_{t-2}	0.425**	0.378**	0.367*	0.486**	0.373*	0.472**
	(0.022)	(0.041)	(0.067)	(0.015)	(0.062)	(0.018)
CAB_t	0.030***	0.026***	0.028**	0.029***	0.028**	0.029***
	(0.004)	(0.009)	(0.024)	(0.010)	(0.022)	(0.008)
CAB_{t-1}	-0.011	-0.013	-0.008	-0.014	-0.009	-0.014
	(0.288)	(0.228)	(0.489)	(0.234)	(0.479)	(0.238)
$M3/GDP_t$	-0.008***	-0.008***	-0.008***	-0.010***	-0.008***	-0.010***
	(0.000)	(0.000)	(0.000)	(0.000)	(0.000)	(0.000)
Obs.	3,414	3,414	2,959	2,943	2,959	2,943

p-value in parentheses
*** p<0.01, ** p<0.05, * p<0.1

Table D.12: Results of probit models for BNB lending with interaction variable between connectivity, credit boom periods and emerging country dummy variable

	Bank-to-Non-Bank Lending					
	(1)	(2)	(3)	(4)	(5)	(6)
Connectivity Measure						
$Ln(FC)$	0.342	1.165***				
	(0.335)	(0.001)				
$Ln(BCC)$			-0.328**	-0.191		
			(0.015)	(0.157)		
$Ln(WCC)$					-0.165	0.095
					(0.314)	(0.565)
Interaction Variables						
$Ln(FC) * E$	-1.684***	-2.387***				
	(0.001)	(0.000)				
$Ln(BCC) * E$			0.746***	0.463**		
			(0.001)	(0.045)		
$Ln(WCC) * E$					0.420	0.385
					(0.175)	(0.230)
$Ln(FC) * Boom$	0.334	0.066				
	(0.694)	(0.936)				
$Ln(BCC) * Boom$			0.095	-0.066		
			(0.516)	(0.637)		
$Ln(WCC) * Boom$					0.098	-0.035
					(0.552)	(0.827)
$Ln(FC) * Boom * E$	-0.12	0.042				
	(0.436)	(0.782)				
$Ln(BCC) * Boom * E$			-0.118	-0.191		
			(0.773)	(0.615)		
$Ln(WCC) * Boom * E$					-0.064	-0.088
					(0.926)	(0.895)
Control Variables						
$Boom$	0.621	0.284	0.312	0.007	0.297*	0.078
	(0.604)	(0.806)	(0.139)	(0.973)	(0.057)	(0.614)
$Ln(GDPpercap)_t$	-0.848***	-1.023***	-1.027***	-1.084***	-1.057***	-1.098***
	(0.001)	(0.000)	(0.000)	(0.000)	(0.000)	(0.000)
$Ln(PrivCredit/GDP)_t$	0.457***	0.424***	0.482***	0.535***	0.497***	0.567***
	(0.000)	(0.000)	(0.000)	(0.000)	(0.000)	(0.000)
HHI_t	0.829***	0.867***	0.730***	0.900***	0.745***	0.896***
	(0.000)	(0.000)	-(0.001)	(0.000)	(0.000)	(0.000)
HHI_{t-1}	0.560***	0.583***	0.728***	0.673***	0.727***	0.684***
	(0.003)	(0.002)	(0.000)	(0.001)	(0.000)	(0.001)
HHI_{t-2}	0.417**	0.421**	0.427**	0.472**	0.436**	0.473**
	(0.025)	(0.024)	(0.032)	(0.017)	(0.028)	(0.017)
CAB_t	0.043***	0.042***	0.043***	0.047***	0.042***	0.049***
	(0.000)	(0.000)	(0.000)	(0.000)	(0.000)	(0.000)
CAB_{t-1}	-0.016	-0.018*	-0.014	-0.014	-0.012	-0.014
	(0.102)	(0.076)	(0.188)	(0.201)	(0.245)	(0.176)
$M3/GDP_t$	-0.009***	-0.010***	-0.011***	-0.013***	-0.011***	-0.013***
	(0.000)	(0.000)	(0.000)	(0.000)	(0.000)	(0.000)
Obs.	3,414	3,414	2,959	2,943	2,959	2,943

p-value in parentheses
*** p<0.01, ** p<0.05, * p<0.1

Table D.13: Results of probit models for BB lending with interaction variable between capital inflow periods and connectivity measures

	Bank-to-Bank Lending					
	(1)	(2)	(3)	(4)	(5)	(6)
Connectivity Measure						
$Ln(FC)$	-0.726**	0.206				
	(0.035)	(0.556)				
$Ln(BCC)$			0.045	0.298**		
			(0.714)	(0.019)		
$Ln(WCC)$					0.126	0.318*
					(0.447)	(0.057)
Interaction Variables						
$Ln(FC) * CapitalInflow$	0.454	0.448				
	(0.576)	(0.574)				
$Ln(BCC) * CapitalInflow$			0.023	-0.025		
			(0.833)	(0.822)		
$Ln(WCC) * CapitalInflow$					0.021	-0.032
					(0.874)	(0.807)
Control Variables						
$CapitalInflow$	0.774	0.899	0.131	0.262*	0.118	0.266**
	(0.517)	(0.443)	(0.395)	(0.081)	(0.378)	(0.042)
$Ln(GDPpercapita)_t$	-1.156***	-1.299***	-1.425***	-1.153***	-1.420***	-1.179***
	(0.000)	(0.000)	(0.000)	(0.000)	(0.000)	(0.000)
$Ln(PrivCredit/GDP)_t$	0.576***	0.556***	0.663***	0.622***	0.667***	0.609***
	(0.000)	(0.000)	(0.000)	(0.000)	(0.000)	(0.000)
HHI_t	1.099***	1.154***	1.128***	1.311***	1.127***	1.298***
	(0.000)	(0.000)	(0.000)	(0.000)	(0.000)	(0.000)
HHI_{t-1}	0.529***	0.585***	0.594***	0.682***	0.593***	0.661***
	(0.004)	(0.002)	(0.003)	(0.001)	(0.003)	(0.001)
HHI_{t-2}	0.382**	0.385**	0.364*	0.486**	0.367*	0.473**
	(0.039)	(0.037)	(0.066)	(0.015)	(0.064)	(0.017)
CAB_t	0.030***	0.026**	0.029**	0.028***	0.029**	0.029***
	(0.006)	(0.010)	(0.028)	(0.009)	(0.028)	(0.008)
CAB_{t-1}	-0.008	-0.003	-0.005	-0.003	-0.005	-0.003
	(0.429)	(0.782)	(0.683)	(0.799)	(0.671)	(0.782)
$M3/GDP_t$	-0.007***	-0.007***	-0.007***	-0.010***	-0.008***	-0.010***
	(0.000)	(0.000)	(0.000)	(0.000)	(0.000)	(0.000)
Observations	3,414	3,414	2,959	2,943	2,959	2,943

p-value in parentheses
*** p<0.01, ** p<0.05, * p<0.1

Table D.14: Results of probit models for BNB lending with interaction variable between capital inflow periods and connectivity measures

	Bank-to-Non-Bank Lending					
	(1)	(2)	(3)	(4)	(5)	(6)
Connectivity Measure						
$Ln(FC)$	-0.139	0.49				
	(0.674)	(0.141)				
$Ln(BCC)$			-0.068	-0.059		
			(0.537)	(0.598)		
$Ln(WCC)$					-0.055	0.154
					(0.696)	(0.279)
Interaction Variables						
$Ln(FC) * CapitalInflow$	0.023	-0.089				
	(0.970)	(0.882)				
$Ln(BCC) * CapitalInflow$			-0.035	-0.102		
			(0.760)	(0.383)		
$Ln(WCC) * CapitalInflow$					-0.008	-0.038
					(0.953)	(0.781)
Control Variables						
$CapitalInflow$	0.141	0.182	0.148	0.269*	0.175	0.326***
	(0.870)	(0.832)	(0.322)	(0.064)	(0.164)	(0.007)
$Ln(GDPpercapita)_t$	-1.010***	-1.197***	-1.101***	-1.087***	-1.091***	-1.079***
	(0.000)	(0.000)	(0.000)	(0.000)	(0.000)	(0.000)
$Ln(PrivCredit/GDP)_t$	0.503***	0.473***	0.505***	0.531***	0.507***	0.558***
	(0.000)	(0.000)	(0.000)	(0.000)	(0.000)	(0.000)
HHI_t	0.880***	0.892***	0.753***	0.897***	0.752***	0.892***
	(0.000)	(0.000)	(0.000)	(0.000)	(0.000)	(0.000)
HHI_{t-1}	0.602***	0.669***	0.732***	0.711***	0.731***	0.712***
	(0.001)	(0.000)	(0.000)	(0.001)	(0.000)	(0.001)
HHI_{t-2}	0.460**	0.495***	0.451**	0.495**	0.451**	0.490**
	(0.013)	(0.008)	(0.023)	(0.013)	(0.023)	(0.014)
CAB_t	0.045***	0.041***	0.045***	0.046***	0.045***	0.048***
	(0.000)	(0.000)	(0.000)	(0.000)	(0.000)	(0.000)
CAB_{t-1}	-0.016	-0.007	-0.012	-0.003	-0.012	-0.003
	(0.111)	(0.471)	(0.279)	(0.817)	(0.271)	(0.781)
$M3/GDP_t$	-0.009***	-0.009***	-0.010***	-0.013***	-0.010***	-0.013***
	(0.000)	(0.000)	(0.000)	(0.000)	(0.000)	(0.000)
Observations	3,769	3,769	3,383	3,378	3,383	3,378

p-value in parentheses
*** p<0.01, ** p<0.05, * p<0.1

Table D.15: Results of probit models for BB lending with interaction variable between connectivity, capital inflow periods and emerging country dummy variable

	Bank-to-Bank Lending					
	(1)	(2)	(3)	(4)	(5)	(6)
Connectivity Measure						
$Ln(FC)$	-0.237	0.837**				
	(0.564)	(0.042)				
$Ln(BCC)$			-0.380**	-0.024		
			(0.017)	(0.884)		
$Ln(WCC)$					-0.321	0.035
					(0.116)	(0.866)
Interaction Variables						
$Ln(FC) * E$	-1.449**	-1.915***				
	(0.021)	(0.003)				
$Ln(BCC) * E$			1.116***	0.837***		
			(0.000)	(0.001)		
$Ln(WCC) * E$					1.430***	0.896**
					(0.000)	(0.015)
$Ln(FC) * Inflow$	0.709	0.606				
	(0.392)	(0.455)				
$Ln(BCC) * Inflow$			-0.014	-0.046		
			(0.904)	(0.687)		
$Ln(WCC) * Inflow$					-0.004	-0.049
					(0.978)	(0.712)
$Ln(FC) * Inflow * E$	-0.242*	-0.144				
	(0.053)	(0.243)				
$Ln(BCC) * Inflow * E$			-0.420	-0.195		
			(0.165)	(0.534)		
$Ln(WCC) * Inflow * E$					-0.752	-0.472
					(0.171)	(0.385)
Control Variables						
$Inflow$	0.978	1.026	0.01	0.207	0.045	0.217
	(0.418)	(0.386)	(0.956)	(0.238)	(0.763)	(0.127)
$Ln(GDPpercap)_t$	-1.078***	-1.209***	-1.256***	-1.044***	-1.273***	-1.095***
	(0.000)	(0.000)	(0.000)	(0.000)	(0.000)	(0.000)
$Ln(PrivCredit/GDP)_t$	0.552***	0.529***	0.634***	0.603***	0.647***	0.597***
	(0.000)	(0.000)	(0.000)	(0.000)	(0.000)	(0.000)
HHI_t	1.093***	1.165***	1.104***	1.279***	1.102***	1.272***
	(0.000)	(0.000)	(0.000)	(0.000)	(0.000)	(0.000)
HHI_{t-1}	0.533***	0.586***	0.624***	0.681***	0.609***	0.662***
	(0.004)	(0.002)	(0.002)	(0.001)	(0.002)	(0.001)
HHI_{t-2}	0.392**	0.383**	0.347*	0.486**	0.358*	0.475**
	(0.034)	(0.038)	(0.083)	(0.015)	(0.073)	(0.017)
CAB_t	0.029***	0.026**	0.028**	0.027**	0.027**	0.028**
	(0.007)	(0.011)	(0.032)	(0.014)	(0.037)	(0.011)
CAB_{t-1}	-0.01	-0.005	-0.007	-0.004	-0.006	-0.004
	(0.359)	(0.663)	(0.595)	(0.765)	(0.622)	(0.747)
$M3/GDP_t$	-0.007***	-0.007***	-0.007***	-0.009***	-0.007***	-0.010***
	(0.000)	(0.000)	(0.000)	(0.000)	(0.000)	(0.000)
Obs.	3,414	3,414	2,959	2,943	2,959	2,943

p-value in parentheses
*** p<0.01, ** p<0.05, * p<0.1

Table D.16: Results of probit models for BNB lending with interaction variable between connectivity, capital inflow periods and emerging country dummy variable

	Bank-to-Non-Bank Lending					
	(1)	(2)	(3)	(4)	(5)	(6)
Connectivity Measure						
$Ln(FC)$	0.253	1.105***				
	(0.485)	(0.003)				
$Ln(BCC)$			-0.324**	-0.230*		
			(0.016)	(0.090)		
$Ln(WCC)$					-0.183	0.023
					(0.266)	(0.892)
Interaction Variables						
$Ln(FC) * E$	-1.515***	-2.253***				
	(0.004)	(0.000)				
$Ln(BCC) * E$			0.831***	0.520**		
			(0.000)	(0.029)		
$Ln(WCC) * E$					0.438	0.269
					(0.164)	(0.403)
$Ln(FC) * Inflow$	0.392	0.049				
	(0.536)	(0.938)				
$Ln(BCC) * Inflow$			-0.088	-0.129		
			(0.450)	(0.278)		
$Ln(WCC) * Inflow$					-0.024	-0.053
					(0.858)	(0.698)
$Ln(FC) * Inflow * E$	-0.262**	-0.070				
	(0.045)	(0.577)				
$Ln(BCC) * Inflow * E$			-0.346	-0.079		
			(0.234)	(0.774)		
$Ln(WCC) * Inflow * E$					-0.017	0.854
					(0.975)	(0.140)
Control Variables						
$Inflow$	0.487	0.319	0.037	0.239	0.173	0.389***
	(0.580)	(0.717)	(0.830)	(0.143)	(0.196)	(0.002)
$Ln(GDPpercap)_t$	-0.836***	-0.975***	-1.025***	-1.045***	-1.061***	-1.069***
	(0.001)	(0.000)	(0.000)	(0.000)	(0.000)	(0.000)
$Ln(PrivCredit/GDP)_t$	0.460***	0.417***	0.480***	0.521***	0.497***	0.558***
	(0.000)	(0.000)	(0.000)	(0.000)	(0.000)	(0.000)
HHI_t	0.855***	0.866***	0.729***	0.887***	0.745***	0.894***
	(0.000)	(0.000)	(0.001)	(0.000)	(0.000)	(0.000)
HHI_{t-1}	0.585***	0.621***	0.744***	0.703***	0.733***	0.708***
	(0.002)	(0.001)	(0.000)	(0.001)	(0.000)	(0.001)
HHI_{t-2}	0.435**	0.444**	0.437**	0.491**	0.451**	0.485**
	(0.020)	(0.018)	(0.029)	(0.013)	(0.024)	(0.015)
CAB_t	0.046***	0.041***	0.047***	0.045***	0.046***	0.049***
	(0.000)	(0.000)	(0.000)	(0.000)	(0.000)	(0.000)
CAB_{t-1}	-0.017*	-0.009	-0.015	-0.003	-0.013	-0.003
	(0.090)	(0.394)	(0.176)	(0.820)	(0.238)	(0.759)
$M3/GDP_t$	-0.009***	-0.009***	-0.011***	-0.013***	-0.011***	-0.013***
	(0.000)	(0.000)	(0.000)	(0.000)	(0.000)	(0.000)
Observations	3,769	3,769	3,383	3,378	3,383	3,378

p-value in parentheses
*** p<0.01, ** p<0.05, * p<0.1

APPENDIX E: Robustness Tests Results for Global Lending Network

Table E.1: Results of probit models for BB lending, controlling for interaction variable between credit boom periods and emerging country dummy variable ($Boom * Emerging_t$)

	Bank-to-Bank Lending					
	FC		**BCC**		**WCC**	
	(t)	**(t-1)**	**(t)**	**(t-1)**	**(t)**	**(t-1)**
Connectivity Measure						
$Ln(C)$	-0.092	1.068***	-0.404**	-0.016	-0.325	0.050
	(0.825)	(0.009)	(0.011)	(0.920)	(0.110)	(0.809)
Interaction Variables						
$Ln(C) * Emerging_t$	-1.902***	-2.562***	1.075***	0.842***	1.269***	0.834**
	(0.004)	(0.000)	(0.000)	(0.002)	(0.001)	(0.026)
$Ln(C) * Boom$	0.589	-0.885	0.114	-0.032	0.100	-0.060
	(0.656)	(0.503)	(0.497)	(0.844)	(0.613)	(0.756)
$Ln(C) * Boom * Emerging_t$	3.185	3.274**	-0.259	-0.328	-0.238	-0.282
	(0.131)	(0.012)	(0.631)	(0.540)	(0.774)	(0.704)
Control Variables						
$Boom$	1.168	-1.268	0.370	-0.013	0.292	-0.027
	(0.552)	(0.517)	(0.179)	(0.962)	(0.225)	(0.910)
$Boom * Emerging_t$	4.803	4.960**	-0.037	0.112	0.077	0.224
	(0.125)	(0.010)	(0.926)	(0.779)	(0.811)	(0.484)
$Ln(GDPpercap)_t$	-1.070***	-1.263***	-1.235***	-1.076***	-1.251***	-1.130***
	(0.000)	(0.000)	(0.000)	(0.000)	(0.000)	(0.000)
$Ln(PrivCredit/GDP)_t$	0.552***	0.546***	0.626***	0.616***	0.637***	0.607***
	(0.000)	(0.000)	(0.000)	(0.000)	(0.000)	(0.000)
HHI_t	1.080***	1.172***	1.088***	1.283***	1.086***	1.271***
	(0.000)	(0.000)	(0.000)	(0.000)	(0.000)	(0.000)
HHI_{t-1}	0.555***	0.566***	0.632***	0.658***	0.625***	0.638***
	(0.003)	(0.002)	(0.001)	(0.002)	(0.002)	(0.002)
HHI_{t-2}	0.427**	0.387**	0.367*	0.485**	0.373*	0.471**
	(0.022)	(0.037)	(0.067)	(0.016)	(0.062)	(0.018)
CAB_t	0.029***	0.025**	0.028**	0.029**	0.028**	0.029***
	(0.005)	(0.015)	(0.024)	(0.010)	(0.023)	(0.009)
CAB_{t-1}	-0.011	-0.012	-0.009	-0.014	-0.009	-0.014
	(0.310)	(0.246)	(0.486)	(0.234)	(0.490)	(0.235)
$M3/GDP_t$	-0.008***	-0.008***	-0.008***	-0.010***	-0.008***	-0.010***
	(0.000)	(0.000)	(0.000)	(0.000)	(0.000)	(0.000)
Obs.	3,414	3,414	2,959	2,943	2,959	2,943

p-value in parentheses
*** p<0.01, ** p<0.05, * p<0.1

Table E.2: Results of probit models for BNB lending, controlling for interaction variable between credit boom periods and emerging country dummy variable ($Boom * Emerging_t$)

	Bank-to-Non-Bank Lending					
	FC		**BCC**		**WCC**	
	(t)	**(t-1)**	**(t)**	**(t-1)**	**(t)**	**(t-1)**
Connectivity Measure						
$Ln(C)$	0.383	1.263***	-0.311**	-0.187	-0.145	0.103
	(0.283)	(0.000)	(0.021)	(0.167)	(0.379)	(0.536)
Interaction Variables						
$Ln(C) * Emerging_t$	-1.836***	-2.761***	0.656***	0.434*	0.328	0.343
	(0.001)	(0.000)	(0.006)	(0.068)	(0.296)	(0.293)
$Ln(C) * Boom$	-0.307	-1.245	-0.043	-0.106	-0.058	-0.097
	(0.779)	(0.223)	(0.800)	(0.510)	(0.764)	(0.593)
$Ln(C) * Boom * Emerging_t$	1.474	3.644**	0.802	0.068	0.692	0.235
	(0.383)	(0.025)	(0.256)	(0.916)	(0.406)	(0.772)
Control Variables						
$Boom$	-0.289	-1.583	0.038	-0.072	0.038	-0.026
	(0.852)	(0.275)	(0.890)	(0.781)	(0.869)	(0.902)
$Boom * Emerging_t$	2.293	5.201**	0.742*	0.224	0.517	0.224
	(0.343)	(0.026)	(0.096)	(0.607)	(0.101)	(0.469)
$Ln(GDPpercap)_t$	-0.844***	-1.015***	-1.037***	-1.084***	-1.060***	-1.097***
	(0.001)	(0.000)	(0.000)	(0.000)	(0.000)	(0.000)
$Ln(PrivCredit/GDP)_t$	0.459***	0.433***	0.486***	0.533***	0.501***	0.566***
	(0.000)	(0.000)	(0.000)	(0.000)	(0.000)	(0.000)
HHI_t	0.833***	0.890***	0.730***	0.895***	0.748***	0.891***
	(0.000)	(0.000)	(0.001)	(0.000)	(0.000)	(0.000)
HHI_{t-1}	0.566***	0.592***	0.743***	0.675***	0.739***	0.686***
	(0.002)	(0.002)	(0.000)	(0.001)	(0.000)	(0.001)
HHI_{t-2}	0.414**	0.430**	0.421**	0.476**	0.430**	0.479**
	(0.026)	(0.021)	(0.035)	(0.016)	(0.031)	(0.016)
CAB_t	0.043***	0.041***	0.043***	0.047***	0.042***	0.049***
	(0.000)	(0.000)	(0.000)	(0.000)	(0.000)	(0.000)
CAB_{t-1}	-0.016	-0.017*	-0.014	-0.014	-0.012	-0.014
	(0.103)	(0.089)	(0.201)	(0.196)	(0.261)	(0.174)
$M3/GDP_t$	-0.009***	-0.009***	-0.011***	-0.013***	-0.011***	-0.013***
	(0.000)	(0.000)	(0.000)	(0.000)	(0.000)	(0.000)
Obs.	3,769	3,769	3,383	3,378	3,383	3,378

p-value in parentheses
*** p<0.01, ** p<0.05, * p<0.1

Table E.3: Results of probit models for BB lending, controlling for interaction variable between capital inflow periods and emerging country dummy variable ($Inflow * Emerging_t$)

	Bank-to-Bank Lending					
	FC		**BCC**		**WCC**	
	(t)	**(t-1)**	**(t)**	**(t-1)**	**(t)**	**(t-1)**
Connectivity Measure						
$Ln(C)$	-0.265	0.911**	-0.376**	-0.018	-0.305	0.040
	(0.531)	(0.032)	(0.019)	(0.910)	(0.138)	(0.848)
Interaction Variables						
$Ln(C) * Emerging_t$	-1.370**	-2.136***	1.100***	0.812***	1.368***	0.876**
	(0.045)	(0.003)	(0.000)	(0.003)	(0.000)	(0.021)
$Ln(C) * Inflow$	0.885	0.161	-0.026	-0.066	-0.055	-0.066
	(0.386)	(0.873)	(0.840)	(0.612)	(0.718)	(0.665)
$Ln(C) * Inflow * Emerging_t$	-0.741	1.091	-0.353	-0.077	-0.491	-0.385
	(0.664)	(0.509)	(0.452)	(0.874)	(0.469)	(0.563)
Control Variables						
$Inflow$	1.236	0.374	-0.018	0.163	-0.048	0.188
	(0.407)	(0.800)	(0.938)	(0.465)	(0.814)	(0.333)
$Inflow * Emerging_t$	-0.741	1.829	0.065	0.107	0.182	0.060
	(0.770)	(0.454)	(0.851)	(0.753)	(0.506)	(0.820)
$Ln(GDPpercap)_t$	-1.078***	-1.215***	-1.255***	-1.043***	-1.267***	-1.093***
	(0.000)	(0.000)	(0.000)	(0.000)	(0.000)	(0.000)
$Ln(PrivCredit/GDP)_t$	0.552***	0.532***	0.634***	0.603***	0.645***	0.596***
	(0.000)	(0.000)	(0.000)	(0.000)	(0.000)	(0.000)
HHI_t	1.093***	1.159***	1.104***	1.278***	1.102***	1.270***
	(0.000)	(0.000)	(0.000)	(0.000)	(0.000)	(0.000)
HHI_{t-1}	0.533***	0.585***	0.625***	0.682***	0.617***	0.663***
	(0.004)	(0.002)	(0.002)	(0.001)	(0.002)	(0.001)
HHI_{t-2}	0.393**	0.382**	0.347*	0.488**	0.356*	0.476**
	(0.034)	(0.039)	(0.083)	(0.015)	(0.074)	(0.017)
CAB_t	0.029***	0.026**	0.028**	0.027**	0.028**	0.028**
	(0.007)	(0.011)	(0.032)	(0.013)	(0.035)	(0.011)
CAB_{t-1}	-0.010	-0.005	-0.007	-0.004	-0.006	-0.004
	(0.359)	(0.658)	(0.595)	(0.761)	(0.606)	(0.751)
$M3/GDP_t$	-0.007***	-0.007***	-0.007***	-0.009***	-0.007***	-0.010***
	(0.000)	(0.000)	(0.000)	(0.000)	(0.000)	(0.000)
Obs.	3,414	3,414	2,959	2,943	2,959	2,943

p-value in parentheses
*** p<0.01, ** p<0.05, * p<0.1

Table E.4: Results of probit models for BNB lending, controlling for interaction variable between capital inflow periods and emerging country dummy variable ($Inflow * Emerging_t$)

	Bank-to-Non-Bank Lending					
	FC		**BCC**		**WCC**	
	(t)	**(t-1)**	**(t)**	**(t-1)**	**(t)**	**(t-1)**
Connectivity Measure						
$Ln(C)$	0.279	1.218***	-0.298**	-0.209	-0.133	0.067
	(0.451)	(0.001)	(0.028)	(0.124)	(0.424)	(0.691)
Interaction Variables						
$Ln(C) * Emerging_t$	-1.592***	-2.613***	0.659***	0.385	0.223	0.068
	(0.006)	(0.000)	(0.008)	(0.125)	(0.490)	(0.839)
$Ln(C) * Inflow$	0.240	-0.583	-0.237*	-0.229*	-0.202	-0.197
	(0.759)	(0.450)	(0.083)	(0.089)	(0.184)	(0.194)
$Ln(C) * Inflow * Emerging_t$	0.159	1.712	0.447	0.503	0.899	1.747**
	(0.901)	(0.175)	(0.338)	(0.272)	(0.166)	(0.014)
Control Variables						
$Inflow$	0.274	-0.573	-0.265	0.047	-0.144	0.144
	(0.802)	(0.598)	(0.238)	(0.815)	(0.433)	(0.392)
$Inflow * Emerging_t$	0.607	2.577	0.747**	0.532	0.654***	0.559**
	(0.739)	(0.155)	(0.027)	(0.102)	(0.009)	(0.020)
$Ln(GDPpercap)_t$	-0.838***	-0.976***	-1.016***	-1.039***	-1.034***	-1.041***
	(0.001)	(0.000)	(0.000)	(0.000)	(0.000)	(0.000)
$Ln(PrivCredit/GDP)_t$	0.461***	0.418***	0.482***	0.522***	0.496***	0.559***
	(0.000)	(0.000)	(0.000)	(0.000)	(0.000)	(0.000)
HHI_t	0.855***	0.857***	0.742***	0.877***	0.759***	0.881***
	(0.000)	(0.000)	(0.000)	(0.000)	(0.000)	(0.000)
HHI_{t-1}	0.587***	0.621***	0.757***	0.716***	0.754***	0.725***
	(0.002)	(0.001)	(0.000)	(0.001)	(0.000)	(0.001)
HHI_{t-2}	0.434**	0.448**	0.451**	0.494**	0.457**	0.497**
	(0.020)	(0.017)	(0.024)	(0.013)	(0.022)	(0.013)
CAB_t	0.046***	0.041***	0.047***	0.046***	0.046***	0.049***
	(0.000)	(0.000)	(0.000)	(0.000)	(0.000)	(0.000)
CAB_{t-1}	-0.017*	-0.008	-0.014	-0.003	-0.013	-0.004
	(0.089)	(0.416)	(0.185)	(0.783)	(0.232)	(0.717)
$M3/GDP_t$	-0.009***	-0.009***	-0.011***	-0.013***	-0.011***	-0.013***
	(0.000)	(0.000)	(0.000)	(0.000)	(0.000)	(0.000)
Obs.	3,769	3,769	3,383	3,378	3,383	3,378

p-value in parentheses
*** p<0.01, ** p<0.05, * p<0.1

Table E.5: Results of probit models for BB lending, controlling for three-way interaction variable between connectivity, credit boom and capital inflow periods ($Ln(C) * Boom * Inflow$)

	Bank-to-Bank Lending					
	FC		**BCC**		**WCC**	
	(t)	**(t-1)**	**(t)**	**(t-1)**	**(t)**	**(t-1)**
Connectivity Measure						
$Ln(C)$	-0.848**	0.131	0.013	0.269**	0.084	0.281*
	(0.019)	(0.722)	(0.915)	(0.036)	(0.614)	(0.097)
Interaction Variables						
$Ln(C) * Boom$	1.951*	1.124	0.218	0.168	0.246	0.215
	(0.099)	(0.332)	(0.154)	(0.253)	(0.181)	(0.226)
$Ln(C) * Inflow$	0.396	0.419	0.068	0.061	0.070	0.076
	(0.651)	(0.618)	(0.557)	(0.600)	(0.609)	(0.580)
$Ln(C) * Boom * Inflow$	-0.930	-0.156	-0.620	-1.188**	-0.773	-1.861**
	(0.713)	(0.952)	(0.116)	(0.036)	(0.114)	(0.028)
Control Variables						
$Boom$	3.153*	1.818	0.415**	0.346*	0.349**	0.316*
	(0.073)	(0.289)	(0.038)	(0.073)	(0.045)	(0.061)
$Inflow$	0.655	0.886	0.125	0.377**	0.098	0.362***
	(0.611)	(0.473)	(0.454)	(0.019)	(0.505)	(0.010)
$Boom * Inflow$	-1.075	-0.414	-0.095	-1.024**	0.067	-0.827**
	(0.773)	(0.914)	(0.818)	(0.030)	(0.845)	(0.033)
$Ln(GDPpercap)_t$	-1.103***	-1.269***	-1.382***	-1.124***	-1.376***	-1.140***
	(0.000)	(0.000)	(0.000)	(0.000)	(0.000)	(0.000)
$Ln(PrivCredit/GDP)_t$	0.566***	0.548***	0.645***	0.606***	0.647***	0.593***
	(0.000)	(0.000)	(0.000)	(0.000)	(0.000)	(0.000)
HHI_t	1.115***	1.147***	1.136***	1.300***	1.139***	1.293***
	(0.000)	(0.000)	(0.000)	(0.000)	(0.000)	(0.000)
HHI_{t-1}	0.561***	0.589***	0.611***	0.678***	0.615***	0.675***
	(0.002)	(0.002)	(0.002)	(0.001)	(0.002)	(0.001)
HHI_{t-2}	0.432**	0.411**	0.401**	0.515**	0.400**	0.510**
	(0.021)	(0.027)	(0.044)	(0.010)	(0.045)	(0.011)
CAB_t	0.035***	0.026**	0.035***	0.029***	0.034***	0.029***
	(0.001)	(0.011)	(0.008)	(0.008)	(0.010)	(0.009)
CAB_{t-1}	-0.011	-0.002	-0.009	-0.002	-0.008	-0.003
	(0.300)	(0.867)	(0.480)	(0.847)	(0.505)	(0.830)
$M3/GDP_t$	-0.008***	-0.008***	-0.008***	-0.010***	-0.008***	-0.010***
	(0.000)	(0.000)	(0.000)	(0.000)	(0.000)	(0.000)
Obs.	3,414	3,414	2,959	2,943	2,959	2,943

p-value in parentheses
*** p<0.01, ** p<0.05, * p<0.1

Table E.6: Results of probit models for BNB lending, controlling for three-way interaction variable between connectivity, credit boom and capital inflow periods ($Ln(C) * Boom * Inflow$)

	Bank-to-Non-Bank Lending					
	FC		**BCC**		**WCC**	
	(t)	**(t-1)**	**(t)**	**(t-1)**	**(t)**	**(t-1)**
Connectivity Measure						
$Ln(C)$	-0.162	0.535	-0.084	-0.059	-0.066	0.146
	(0.632)	(0.120)	(0.451)	(0.595)	(0.639)	(0.307)
Interaction Variables						
$Ln(C) * Boom$	0.707	-0.067	0.129	0.045	0.095	0.084
	(0.460)	(0.941)	(0.422)	(0.766)	(0.609)	(0.636)
$Ln(C) * Inflow$	0.267	-0.142	-0.027	-0.043	-0.009	0.034
	(0.678)	(0.822)	(0.826)	(0.727)	(0.949)	(0.811)
$Ln(C) * Boom * Inflow$	-2.247	0.083	-0.202	-0.648	-0.095	-0.844
	(0.255)	(0.966)	(0.588)	(0.161)	(0.826)	(0.149)
Control Variables						
$Boom$	1.151	0.132	0.281	0.189	0.212	0.189
	(0.397)	(0.918)	(0.166)	(0.340)	(0.214)	(0.252)
$Inflow$	0.444	0.148	0.105	0.337**	0.125	0.377***
	(0.626)	(0.870)	(0.515)	(0.029)	(0.359)	(0.003)
$Boom * Inflow$	-2.882	-0.145	0.231	-0.580	0.346	-0.415
	(0.311)	(0.959)	(0.565)	(0.197)	(0.291)	(0.241)
$Ln(GDPpercap)_t$	-1.005***	-1.177***	-1.086***	-1.076***	-1.072***	-1.066***
	(0.000)	(0.000)	(0.000)	(0.000)	(0.000)	(0.000)
$Ln(PrivCredit/GDP)_t$	0.500***	0.457***	0.500***	0.525***	0.501***	0.550***
	(0.000)	(0.000)	(0.000)	(0.000)	(0.000)	(0.000)
HHI_t	0.884***	0.872***	0.766***	0.883***	0.760***	0.876***
	(0.000)	(0.000)	(0.000)	(0.000)	(0.000)	(0.000)
HHI_{t-1}	0.607***	0.660***	0.727***	0.715***	0.729***	0.714***
	(0.001)	(0.000)	(0.000)	(0.001)	(0.000)	(0.001)
HHI_{t-2}	0.473**	0.496***	0.456**	0.491**	0.458**	0.485**
	(0.011)	(0.008)	(0.022)	(0.013)	(0.022)	(0.014)
CAB_t	0.048***	0.042***	0.048***	0.047***	0.049***	0.048***
	(0.000)	(0.000)	(0.000)	(0.000)	(0.000)	(0.000)
CAB_{t-1}	-0.017*	-0.007	-0.013	-0.002	-0.013	-0.003
	(0.082)	(0.498)	(0.232)	(0.861)	(0.225)	(0.805)
$M3/GDP_t$	-0.010***	-0.009***	-0.011***	-0.013***	-0.011***	-0.013***
	(0.000)	(0.000)	(0.000)	(0.000)	(0.000)	(0.000)
Obs.	3,769	3,769	3,383	3,378	3,383	3,378

p-value in parentheses
*** p<0.01, ** p<0.05, * p<0.1

Table E.7: Results of probit models for BB lending with interaction between the variables and the dummy variable taking value of one for the post-crisis (2008-2016) period, controlling for credit boom periods.

	Bank-to-Bank Lending					
	FC		BCC		WCC	
	(t)	(t-1)	(t)	(t-1)	(t)	(t-1)
Connectivity						
$Ln(C)$	-2.926***	-1.985***	-1.530**	-0.947**	-2.926**	-0.639*
	(0.000)	(0.000)	(0.015)	(0.050)	(0.026)	(0.083)
Interaction Variables						
$Ln(C) * D2008$	3.363***	2.788***	-0.342**	-0.468*	-0.691**	-0.723*
	(0.000)	(0.000)	(0.017)	(0.075)	(0.062)	(0.058)
$Ln(C) * Boom$	4.359***	4.393***	3.122***	0.893*	2.584**	0.693**
	(0.000)	(0.003)	(0.005)	(0.068)	(0.058)	(0.023)
$Ln(C) * Boom * D2008$	-2.405	-4.810**	-1.278	-0.810*	-2.126	-1.102**
	(0.393)	(0.037)	(0.528)	(0.087)	(0.325)	(0.031)
Control Variables						
$Boom$	4.847***	4.668***	2.638**	1.668**	2.835*	1.184**
	(0.000)	(0.002)	(0.018)	(0.012)	(0.085)	(0.054)
$Boom * D2008$	-3.763	-4.211**	-2.739	-4.211**	-2.162	-1.211**
	(0.377)	(0.034)	(0.152)	(0.034)	(0.324)	(0.048)
$Ln(GDPpc)_t$	-1.675***	-1.828***	-1.632***	-1.828***	-1.338***	-1.861***
	(0.000)	(0.000)	(0.000)	(0.000)	(0.000)	(0.000)
$Ln(GDPpc)_t * D2008$	0.337***	0.268**	0.326**	0.268**	0.105**	0.258**
	(0.007)	(0.026)	(0.018)	(0.026)	(0.034)	(0.051)
$Ln(PC/GDP)_t$	0.409***	0.415***	0.592***	0.415***	0.628***	0.227***
	(0.001)	(0.001)	(0.006)	(0.001)	(0.008)	(0.007)
$Ln(PC/GDP)_t * D2008$	0.779***	0.764***				
	(0.000)	(0.000)				
HHI_t	0.949***	1.108***	1.342***	1.108***	1.521***	1.231***
	(0.000)	(0.000)	(0.000)	(0.000)	(0.000)	(0.000)
$HHI_t * D2008$	-0.528	-0.807*				
	(0.272)	(0.079)				
HHI_{t-1}	0.325	0.313	0.123	0.313	0.348	0.115
	(0.129)	(0.146)	(0.118)	(0.146)	(0.142)	(0.251)
$HHI_{t-1} * D2008$	-0.462	-0.441				
	(0.343)	(0.365)				
HHI_{t-2}	0.310	0.320	0.325	0.320	0.429	0.328
	(0.150)	(0.131)	(0.162)	(0.131)	(0.294)	(0.146)
$HHI_{t-2} * D2008$	-0.797	-0.806				
	(0.110)	(0.104)				
CAB_t	0.032***	0.026**	0.065***	0.026**	0.136**	0.101**
	(0.007)	(0.028)	(0.005)	(0.028)	(0.037)	(0.053)
$CAB_t * D2008$	0.016	0.020				
	(0.632)	(0.542)				
CAB_{t-1}	-0.009	-0.008	-0.012	-0.008	-0.015	-0.005
	(0.490)	(0.506)	(0.432)	(0.506)	(0.630)	(0.479)
$CAB_{t-1} * D2008$	-0.002	-0.002				
	(0.952)	(0.942)				
$M3/GDP_t$	-0.005***	-0.005***	-0.007***	-0.005***	-0.004***	-0.005***
	(0.006)	(0.007)	(0.009)	(0.007)	(0.005)	(0.009)
$M3/GDP_t * D2008$	-0.016	-0.017*				
	(0.106)	(0.089)				
Obs.	3,414	3,414	2,959	2,943	2,959	2,943

p-value in parentheses
*** p<0.01, ** p<0.05, * p<0.1

Table E.8: Results of probit models for BNB lending with interaction between the variables and the dummy variable taking value of one for the post-crisis (2008-2016) period, controlling for credit boom periods.

	Bank-to-Non-Bank Lending					
	FC		**BCC**		**WCC**	
	(t)	**(t-1)**	**(t)**	**(t-1)**	**(t)**	**(t-1)**
Connectivity						
$Ln(C)$	-1.344***	-1.000**	0.078	0.097	0.108	0.372**
	(0.001)	(0.014)	(0.521)	(0.420)	(0.481)	(0.017)
Interactions						
$Ln(C) * D2008$	2.914***	2.931***	-0.579***	-0.537***	-0.685***	-0.722***
	(0.000)	(0.000)	(0.000)	(0.000)	(0.000)	(0.000)
$Ln(C) * Boom$	1.413	1.211	0.073	-0.092	0.061	-0.082
	(0.117)	(0.224)	(0.676)	(0.579)	(0.769)	(0.676)
$Ln(C) * Boom * D2008$	1.820	-3.283	-0.024	-0.297	0.015	-0.232
	(0.788)	(0.282)	(0.961)	(0.575)	(0.979)	(0.705)
Controls						
$Boom$	2.296*	1.928	0.329*	0.012	0.300*	0.049
	(0.079)	(0.185)	(0.073)	(0.947)	(0.051)	(0.752)
$Boom * D2008$	2.310	-4.300	-0.159	-0.349	-0.127	-0.114
	(0.798)	(0.284)	(0.832)	(0.642)	(0.829)	(0.841)
$Ln(GDPpc)_t$	-1.553***	-1.637***	-1.820***	-1.743***	-1.813***	-1.728***
	(0.000)	(0.000)	(0.000)	(0.000)	(0.000)	(0.000)
$Ln(GDPpc)_t * D2008$	0.206*	0.199*	-0.173**	-0.155*	-0.154*	-0.144*
	(0.061)	(0.071)	(0.042)	(0.070)	(0.069)	(0.092)
$Ln(PC/GDP)_t$	0.392***	0.392***	0.355***	0.414***	0.359***	0.438***
	(0.000)	(0.000)	(0.003)	(0.000)	(0.003)	(0.000)
$Ln(PC/GDP)_t * D2008$	0.663***	0.666***	0.614***	0.588***	0.603***	0.567***
	(0.000)	(0.000)	(0.001)	(0.001)	(0.001)	(0.002)
HHI_t	0.653***	0.729***	0.665***	0.873***	0.654***	0.851***
	(0.002)	(0.000)	(0.008)	(0.000)	(0.009)	(0.000)
$HHI_t * D2008$	0.044	-0.104	-0.368	-0.565	-0.324	-0.470
	(0.926)	(0.820)	(0.429)	(0.210)	(0.488)	(0.299)
HHI_{t-1}	0.380*	0.396*	0.680***	0.661***	0.674***	0.638**
	(0.077)	(0.066)	(0.004)	(0.008)	(0.004)	(0.011)
$HHI_{t-1} * D2008$	-0.205	-0.045	-0.712	-0.731	-0.681	-0.627
	(0.657)	(0.924)	(0.122)	(0.134)	(0.140)	(0.201)
HHI_{t-2}	0.199	0.213	0.299	0.337	0.292	0.325
	(0.356)	(0.321)	(0.194)	(0.139)	(0.205)	(0.153)
$HHI_{t-2} * D2008$	-0.004	0.004	-0.474	-0.452	-0.433	-0.396
	(0.993)	(0.994)	(0.292)	(0.313)	(0.336)	(0.381)
CAB_t	0.045***	0.043***	0.043***	0.048***	0.043***	0.050***
	(0.000)	(0.000)	(0.001)	(0.000)	(0.001)	(0.000)
$CAB_t * D2008$	-0.001	0.006	0.025	0.002	0.024	0.002
	(0.977)	(0.845)	(0.400)	(0.946)	(0.426)	(0.946)
CAB_{t-1}	-0.021*	-0.023*	-0.021	-0.026**	-0.021	-0.026**
	(0.066)	(0.050)	(0.101)	(0.040)	(0.108)	(0.047)
$CAB_{t-1} * D2008$	0.035	0.031	0.019	0.043	0.018	0.038
	(0.208)	(0.273)	(0.501)	(0.126)	(0.520)	(0.175)
$M3/GDP_t$	-0.007***	-0.007***	-0.008***	-0.009***	-0.008***	-0.009***
	(0.000)	(0.000)	(0.000)	(0.000)	(0.000)	(0.000)
$M3/GDP_t * D2008$	-0.018*	-0.016*	-0.024***	-0.024***	-0.024***	-0.023**
Obs.	3,769	3,769	3,383	3,378	3,383	3,378

p-value in parentheses
*** p<0.01, ** p<0.05, * p<0.1

Table E.9: Results of probit models for BB lending with interaction between the variables and the dummy variable taking value of one for the post-crisis (2008-2016) period, controlling for capital inflow periods.

	Bank-to-Bank Lending					
	FC		**BCC**		**WCC**	
	(t)	**(t-1)**	**(t)**	**(t-1)**	**(t)**	**(t-1)**
Connectivity	FC		BCC		WCC	
	(t)	(t-1)	(t)	(t-1)	(t)	(t-1)
Connectivity Measure						
$Ln(C)$	-2.985***	-2.049***	0.282**	0.122	0.517***	0.627
	(0.000)	(0.000)	(0.050)	(0.366)	(0.009)	(0.231)
Interaction Variables						
$Ln(C) * D2008$	3.713***	2.873***	-0.701***	0.831	-0.885***	0.816
	(0.000)	(0.000)	(0.001)	(0.522)	(0.000)	(0.481)
$Ln(C) * Inflow$	3.272***	3.079***	0.056	0.023	0.060	0.052
	(0.002)	(0.008)	(0.694)	(0.792)	(0.722)	(0.719)
$Ln(C) * Inflow * D2008$	-4.446***	-4.820*	-0.176	-0.418	-0.257	-0.483
	(0.008)	(0.055)	(0.655)	(0.652)	(0.585)	(0.657)
Control Variables						
$Inflow$	4.948***	4.852***	0.070	0.102	0.048	0.168
	(0.001)	(0.005)	(0.679)	(0.535)	(0.749)	(0.793)
$Inflow * D2008$	-1.041***	-4.185**	-0.157	-0.482	-0.162	-0.182
	(0.006)	(0.039)	(0.794)	(0.731)	(0.745)	(0.635)
$Ln(GDPpc)_t$	-1.706***	-1.811***	-2.142***	-1.627***	-2.124***	-1.268***
	(0.000)	(0.000)	(0.000)	(0.000)	(0.000)	(0.000)
$Ln(GDPpc)_t * D2008$	0.391***	0.290**	-0.188*	-0.192**	-0.168	-0.273
	(0.002)	(0.019)	(0.074)	(0.017)	(0.103)	(0.118)
$Ln(PC/GDP)_t$	0.411***	0.408***	0.538***	0.461***	0.546***	0.469***
	(0.001)	(0.001)	(0.000)	(0.001)	(0.000)	(0.001)
$Ln(PC/GDP)_t * D2008$	0.762***	0.751***	0.741***		0.715***	
	(0.000)	(0.000)	(0.000)		(0.001)	
HHI_t	0.960***	1.086***	1.284***	1.273***	1.245***	1.471***
	(0.000)	(0.000)	(0.000)	(0.000)	(0.000)	(0.000)
$HHI_t * D2008$	-0.489	-0.825*	-1.033**		-0.916*	
	(0.308)	(0.073)	(0.035)		(0.065)	
HHI_{t-1}	0.306	0.342	0.591***	0.359	0.565**	0.232
	(0.150)	(0.111)	(0.009)	(0.192)	(0.013)	(0.128)
$HHI_{t-1} * D2008$	-0.450	-0.456	-0.977**		-0.865*	
	(0.355)	(0.352)	(0.049)		(0.084)	
HHI_{t-2}	0.281	0.318	0.366	0.394	0.366	0.364
	(0.190)	(0.132)	(0.108)	(0.182)	(0.109)	(0.184)
$HHI_{t-2} * D2008$	-0.842*	-0.835*	-0.939*		-0.890*	
	(0.091)	(0.092)	(0.066)		(0.083)	
CAB_t	0.030**	0.027**	0.023	0.025	0.023	0.022
	(0.019)	(0.021)	(0.127)	(0.134)	(0.128)	(0.235)
$CAB_t * D2008$	0.013	0.014	0.023		0.022	
	(0.691)	(0.680)	(0.525)		(0.542)	
CAB_{t-1}	-0.007	-0.001	-0.001	-0.001	-0.001	-0.001
	(0.581)	(0.938)	(0.945)	(0.951)	(0.960)	(0.961)
$CAB_{t-1} * D2008$	-0.006	-0.007	-0.005		-0.008	
	(0.828)	(0.810)	(0.878)		(0.809)	
$M3/GDP_t$	-0.005**	-0.005***	-0.005***	-0.004***	-0.005***	-0.005***
	(0.010)	(0.008)	(0.010)	(0.008)	(0.008)	(0.007)
$M3/GDP_t * D2008$	-0.016	-0.017*	-0.027***		-0.026***	
	(0.106)	(0.083)	(0.007)		(0.010)	
Obs.	3,414	3,414	2,959	2,943	2,959	2,943

p-value in parentheses
*** p<0.01, ** p<0.05, * p<0.1

Table E.10: Results of probit models for BNB lending with interaction between the variables and the dummy variable taking value of one for the post-crisis (2008-2016) period, controlling for capital inflow periods.

	Bank-to-Non-Bank Lending					
	FC		**BCC**		**WCC**	
	(t)	**(t-1)**	**(t)**	**(t-1)**	**(t)**	**(t-1)**
Connectivity						
$Ln(C)$	-1.403***	-1.149***	0.075	0.080	0.095	0.321**
	(0.000)	(0.006)	(0.535)	(0.505)	(0.536)	(0.039)
Interaction Variables						
$Ln(C) * D2008$	3.170***	2.945***	-0.571***	-0.589***	-0.671***	-0.758***
	(0.000)	(0.000)	(0.000)	(0.000)	(0.000)	(0.000)
$Ln(C) * Inflow$	1.559**	1.728**	0.037	-0.174	0.113	-0.065
	(0.047)	(0.038)	(0.803)	(0.238)	(0.530)	(0.714)
$Ln(C) * Inflow * D2008$	-4.404**	-3.933*	-0.091	0.265	-0.124	0.209
	(0.020)	(0.091)	(0.789)	(0.405)	(0.749)	(0.568)
Control Variables						
$Inflow$	2.327**	2.835**	0.168	0.222	0.181	0.303**
	(0.044)	(0.021)	(0.317)	(0.168)	(0.203)	(0.024)
$Inflow * D2008$	-4.319**	-3.417*	-0.223	-0.043	-0.170	-0.131
	(0.018)	(0.068)	(0.663)	(0.927)	(0.676)	(0.730)
$Ln(GDPpc)_t$	-1.578***	-1.629***	-1.793***	-1.705***	-1.784***	-1.694***
	(0.000)	(0.000)	(0.000)	(0.000)	(0.000)	(0.000)
$Ln(GDPpc)_t * D2008$	0.239**	0.213*	-0.170**	-0.153*	-0.150*	-0.139
	(0.034)	(0.058)	(0.047)	(0.075)	(0.076)	(0.105)
$Ln(PC/GDP)_t$	0.393***	0.370***	0.358***	0.392***	0.364***	0.416***
	(0.000)	(0.001)	(0.003)	(0.001)	(0.002)	(0.000)
$Ln(PC/GDP)_t * D2008$	0.666***	0.672***	0.609***	0.580***	0.597***	0.560***
	(0.000)	(0.000)	(0.001)	(0.001)	(0.001)	(0.002)
HHI_t	0.669***	0.714***	0.675***	0.864***	0.662***	0.841***
	(0.002)	(0.001)	(0.007)	(0.000)	(0.008)	(0.000)
$HHI_t * D2008$	0.007	-0.133	-0.387	-0.529	-0.342	-0.447
	(0.988)	(0.772)	(0.404)	(0.238)	(0.462)	(0.321)
HHI_{t-1}	0.384*	0.442**	0.681***	0.701***	0.675***	0.674***
	(0.073)	(0.041)	(0.004)	(0.005)	(0.004)	(0.007)
$HHI_{t-1} * D2008$	-0.212	-0.135	-0.713	-0.746	-0.684	-0.650
	(0.646)	(0.777)	(0.121)	(0.125)	(0.138)	(0.184)
HHI_{t-2}	0.181	0.226	0.324	0.354	0.316	0.338
	(0.403)	(0.291)	(0.162)	(0.121)	(0.172)	(0.138)
$HHI_{t-2} * D2008$	0.015	-0.038	-0.502	-0.504	-0.461	-0.429
	(0.974)	(0.934)	(0.264)	(0.261)	(0.307)	(0.343)
CAB_t	0.046***	0.044***	0.047***	0.047***	0.048***	0.048***
	(0.000)	(0.000)	(0.001)	(0.001)	(0.001)	(0.000)
$CAB_t * D2008$	-0.003	0.002	0.020	0.004	0.018	0.005
	(0.910)	(0.954)	(0.517)	(0.888)	(0.552)	(0.870)
CAB_{t-1}	-0.021*	-0.012	-0.022*	-0.012	-0.022*	-0.012
	(0.066)	(0.318)	(0.091)	(0.368)	(0.094)	(0.392)
$CAB_{t-1} * D2008$	0.033	0.023	0.021	0.031	0.020	0.027
	(0.232)	(0.418)	(0.449)	(0.269)	(0.464)	(0.348)
$M3/GDP_t$	-0.006***	-0.006***	-0.008***	-0.009***	-0.008***	-0.009***
	(0.000)	(0.000)	(0.000)	(0.000)	(0.000)	(0.000)
$M3/GDP_t * D2008$	-0.018*	-0.017*	-0.025***	-0.024***	-0.024***	-0.024**
	(0.057)	(0.062)	(0.006)	(0.008)	(0.007)	(0.010)
Obs.	3,769	3,769	3,383	3,378	3,383	3,378

p-value in parentheses
*** p<0.01, ** p<0.05, * p<0.1