A NEW SURFACE ACOUSTIC WAVE IMAGING TECHNIQUE

Abdullah Atalar and Hayrettin Koymen

Electrical and Electronics Engineering Department
Middle East Technical University
Ankara, Turkey

ABSTRACT

A new type of imaging technique is presented which incorporates focussed surface acoustic waves. Surface acoustic waves are generated on the surface to be imaged by use of conical wavefronts. The conical wavefronts are obtained through the reflection of planar wavefronts from a parabolic cylindrical mirror. An imaging system is built which uses focussed surface acoustic waves in a mechanical scanning arrangement controlled by a computer. The resulting images show subsurface features with diffraction limited resolution.

INTRODUCTION

Acoustic imaging systems for nondestructive evaluation purposes are becoming popular and widely used after commercialization of several such instruments. The scanning acoustic microscope is widely accepted as a scientific instrument finding applications in areas such as thin film technology, metallurgy, material science and biology[1]. It produces acoustic images of plane surfaces of materials by a spherically converging bulk wave obtained by an acoustic lens in the form of a spherical cavity. These images result in a diffraction limited resolution determined by the frequency of acoustic waves. Images are sensitive to acoustic parameters of the surface material as well as to the thicknesses of the layers close to the surface. When the acoustic beam is focussed below the surface, it is possible to get subsurface information on acoustic images, because the acoustic waves can penetrate most materials. If the images are taken at that position, a high contrast is obtained in acoustic micrographs. The principal mechanism for material dependence of acoustic microscope response is the interference of nonspecular leaky surface acoustic waves (SAW) with specularly reflected bulk waves[2].

In acoustic microscopy, the penetration depth of acoustic waves into the object material is limited by SAW wavelength if the object has acoustically high impedance[3]. The obtained images are superposition of two types of information; surface data as produced by bulk waves in the liquid and subsurface data as produced by SAW. The relative contribution of SAW is small, because only a small fraction of available power is converted into this mode. On the other hand, for low impedance materials it is

H. W. Jones (ed.), *Proceedings of the Fifteenth International Symposium, July 14-6, 1986*

possible to increase the penetration if bulk waves are used in focussing[4].

To increase the sensitivity to subsurface properties, one may try to increase the contribution of the SAW in the imaging system. Smith et. al.[5] tried to obtain focussed SAW on the surface to be examined by defocussing a spherical acoustic microscope lens. Nongaillard et. al.[6] proposed to use cylindrically focussed waves to generate focussed SAW. Jen et.al.[7] used optical excitation techniques to generate it. But these techniques suffer from low conversion efficiency or from aberrations.

In this paper, we describe a new acoustic imaging mode, which could be used with acoustic microscopes. With this novel method, conical wavefronts are produced by reflection of plane waves from a cylindrical mirror and conical wavefronts generate the surface acoustic waves on the surface of the material, focussed on a diffraction limited size[8]. When this focussing technique is used in pulse-echo mode with suitable scan and display mechanisms, it is possible to obtain acoustic images. We will present SAW images using this technique demonstrating the subsurface capabilities and the predicted resolution.

DESCRIPTION OF THE IMAGING SYSTEM

First we will explain how a conical phasefront can be generated. Then we will show how a conical phasefront can be used to obtain focussed surface acoustic waves.

Let us first define what we mean by a conical surface and a conical phasefront: A smooth surface in space is said to be conical surface with respect to an axis (called cone axis), if the the following two conditions are satisfied:

Condition 1. The intersection of this surface with any plane containing the cone axis is a straight line.

Condition 2. The intersection of this surface with any plane perpendicular to the cone axis is circular.

A wave is said to have a conical phasefront if the equal phase surfaces are conical.

With these definitions in mind, we may now proceed to prove that a conical phasefront can be generated if a planar wavefront is obliquely incident on a parabolic cylindrical mirror. Consider the geometry shown in Fig.1. Let the parabolic cylindrical mirror be placed such that its focal axis is coincident with y axis and the vertex of the parabola be on the z axis. Hence y-z plane intersects the mirror into two symmetrical parts. Let the incident plane wavefront (plane A) be perpendicular to the y-z plane and make an angle γ with the focal axis (y-axis). Let AA' be a straight line in this plane and parallel to the y-z plane. The acoustic rays emanating from AA' intersect the mirror surface at BB'. BB' is parallel to the focal axis. The acoustic rays, after reflection from the mirror will travel toward the focal axis. Therefore, they lie in a plane, B that contains the focal axis and BB'. Because the AA' wavefront is reflected from the straight line BB', the equal phasefront in plane B is a straight line, CC'. This meets the condition 1.

Now we will show that a line in A plane that is parallel to x-axis (perpendicular to the y-z plane), AD, upon reflection is mapped onto a circular arc which is in a plane parallel to x-z plane. All the acoustic

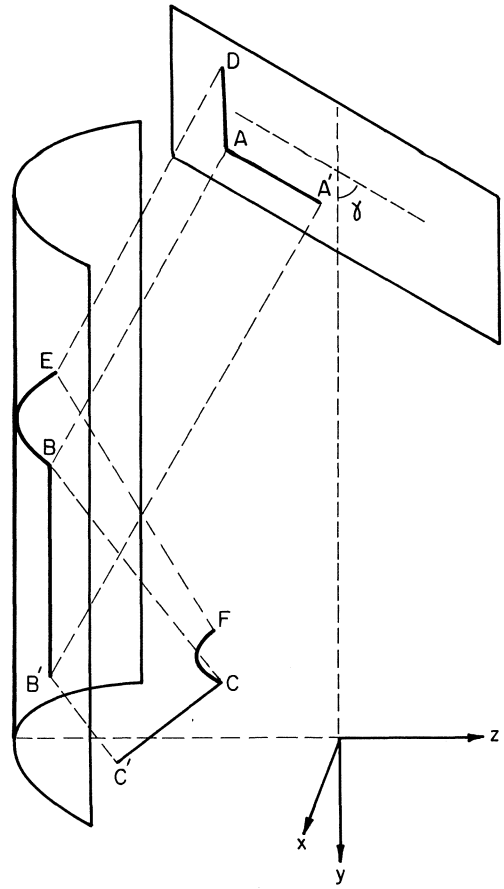

Fig.1. Three dimensional view of the geometry

rays emanating from AD make an angle 90-γ with y-axis. After reflection from the mirror surface which is perpendicular to the x-z plane, they preserve their angle of approach to x-z plane. This fact can be proven easily using vector analysis for these rays. Let an incident ray before reflection be the vector a=(0,sin(γ),cos(γ)). The mirror surface (or a normal to this surface) at the reflection point can be represented by the vector b=(-sin(β),0,cos(β)), where β is the angle between this surface and the z-axis. Let the reflected ray be represented by the vector c=(u,v,w). a, b and c vectors must lie in the same plane. This condition can be written as a x b = c x b. Expansion of the cross product gives v=sin(γ). The direction cosines of rays in y direction are preserved upon reflection. Therefore, the y components can be separated and the remaining x-z components can be analysed independently. Consider the top view of the geometry as in Fig.2. It is clear from the figure that AD maps onto CF arc upon reflection from the parabolic surface. Since AB+BC is equal to DE+EF, the total y displacement from A to C is equal to that from D to F. Hence, DF arc lies in a plane perpendicular to y-axis and condition 2 is

also met. With the above arguments, the reflected wavefront is shown to be a conical wavefront with its cone axis coincident with the focal axis.

Let us suppose that we place a planar object surface perpendicular to the cone axis (or parallel to x-z plane). The intersection of this surface and the conical phasefront is a circular arc. If the size of the parabolic cylinder is finite, the reflected wave will be a section of the conical surface, and hence the intersection with the material surface will be a circular arc rather than a complete circle.

It is well known[8] that a beam incident on a liquid-solid interface excites surface waves strongly, provided that the incidence angle is equal to the Rayleigh critical angle. This phenomenon has been used to build highly efficient wedge transducers which convert bulk waves to SAW[9]. In a similar arrangement, if bulk waves with conical phasefronts are used, focussed SAW can be obtained: Referring to Fig.3, the object surface is placed perpendicular to the cone axis and the cone angle of the conical wave is adjusted so that the waves hit the surface at the Rayleigh critical angle ($\gamma = 90 - \theta_R$). As the conical wavefront propagates towards the interface (at time t_2, t_3 and t_4 in Fig.3), the intersection with the material surface will be a circular arc with diminishing radius. The center of curvature of all the arcs will be the same and they will converge to this center which is the SAW focus (at time t_5). The excited surface wave will reinforce the surface wavefront previously excited when the arc radius was larger. This is because of the fact that the incidence angle selected matches the k vector components along the interface. Notice that by this process all the energy in a conical wavefront is converted into a single circularly converging wavefront of the surface wave.

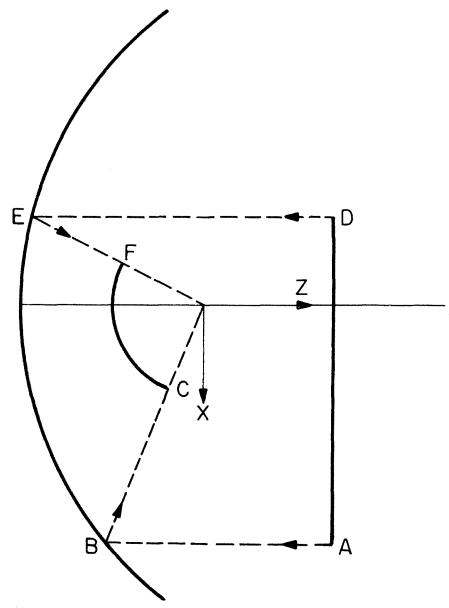

Fig.2.Top view of the geometry showing two rays

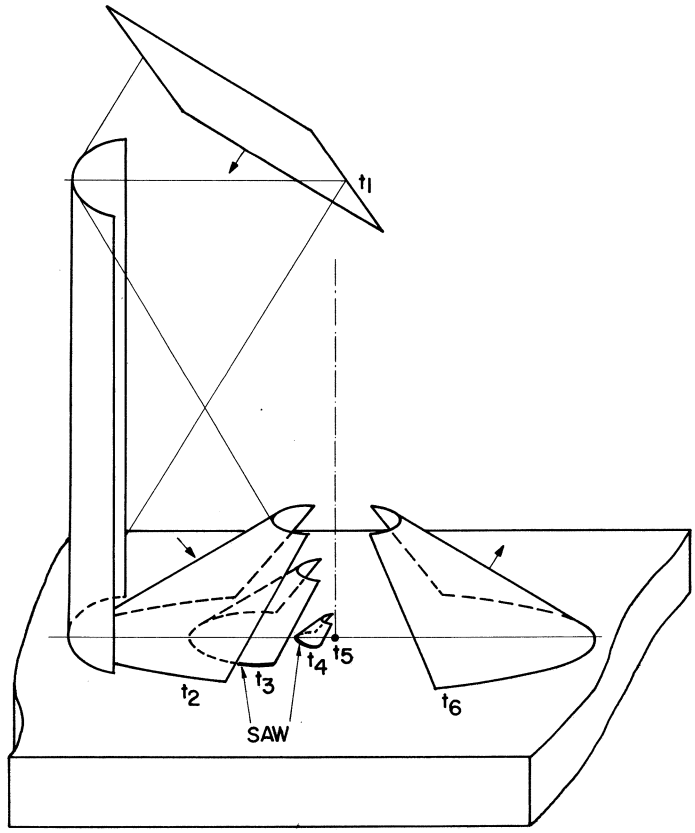

Fig.3. 3-D view of the geometry showing the SAW focussing mechanism

It may be shown[10] that there is an optimum focal length to optimize the conversion efficiency into SAW. This optimal focal length depends on factors like Schoch displacement and the attenuation constant of surface waves on the surface under investigation, and the openning angle of the parabolic cylindrical mirror. For example, the optimal focal length for a mirror involving an opening angle of 77 degrees is given by

$$f_{OPT}=1.1/(\alpha_L+\alpha_D)$$

where $\alpha_L=2/\Delta_S$, α_D is the attenuation constant of SAW and Δ_S is the Schoch displacement[12]. The conversion efficiency under this condition is approximately 70%.

EXPERIMENTAL WORK

The experimental acoustic imaging system is realized by using a planar ultrasonic transducer, in pulse-echo mode with a resonance frequency of 1.5 MHz. The parabolic cylindrical mirror is approximated by a circular cylindrical surface. This approximation is very good if the lateral extent of the mirror is not too big. It has been shown[10] that the f-number of the imaging system can be as low as 0.47 (for aluminum) if the maximum phase error is to be kept less than a quarter wavelength. The transducer and mirror assembly is mounted on a mechanical X-Y stage (oriented on x-z plane in Fig.1.) which is driven by two stepper motors. The step size is 10 micrometers in either direction. The X-Y stage scans the surface of the test material under the control of an IBM-XT personal computer. The speed of the scan is limited by the maximum speed of the stepper motors and it is not particularly fast. A 10 mm by 10 mm area scan is completed in about 5 minutes.

The signal is produced and received by simple electronics. As depicted in Fig.4., a short base-band pulse is applied to the transducer through a transformer-type power divider. The output arm of the power divider is connected to the receiver amplifier. The power divider provides some degree of isolation between pulse generator and the receiver. The output of amplifier is fed to a sample and hold circuit to generate the video signal. The bandwidth of the video signal is rather low and it is determined by the scan speed. The video data is acquired by the computer through an ordinary A/D converter add-on card. The 12 bit A/D converter has a conversion time of 30 microseconds. Once the data is stored in the computer, the signal processing operations can be performed with ease.

The images can be produced on a computer graphic screen in several

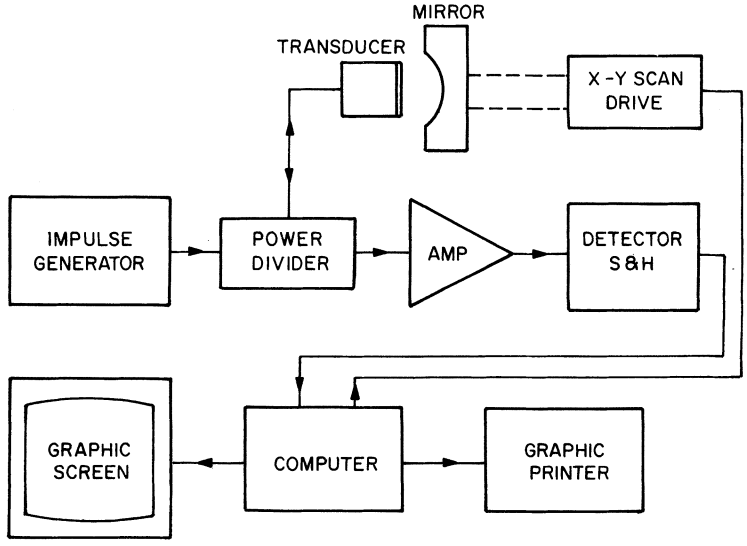

Fig.4. The block diagram of imaging system

ways. The video signal obtained for each scan line can be plotted on the screen with a little displacement each time. With the hidden line blanking, the resulting picture has a three dimensional impression, but it is hard to recognize and identify structures in such images. Another imaging mode that can be used is to define pixels with varying intensity, and assign these pixels to varying acoustic signal intensity. Both techniques are suitable to get hard-copies with ordinary dot-matrix printers. If a computer color graphic screen is used, the acoustic intensity can be mapped to colors to obtain false-color acoustic images. Fig.5.(a) and (b) show acoustic images of a test piece using the techniques described above as obtained with a dot-matrix printer. The test piece is an aluminum block with holes drilled from the side of the block as shown in Fig.5.(c). In the acoustic image only the ends of the holes are delineated, since these are the only places where a SAW backscatter can occur. Note that, the presence of holes also modifies the edge reflection through a complex process[13] at the points where the holes start. If the mirror had been aligned such that the z-axis in Fig.1 is perpendicular to the axis of the holes rather than parallel to them, the image would have shown the holes in their entirety. The focussing system does not receive all the scattered signals at a discontinuity, but rather those falling within the coverage angle of the mirror.

To test the system we have fabricated other phantoms made of drawn aluminum. The first piece contains holes of 2 mm diameter drilled from the backside arranged in 3 by 3 matrix as shown in Fig.6(a). The holes stay clear of the front surface by 0.5 mm in the first matrix and 1.5 mm in the second. The SAW image of the test piece is displayed in Fig.6(b). The holes are clearly resolved and the received signals are well above the noise. Although round holes are involved, the images of holes are not quite circular. This is most likely due to the non-circular point spread function of the focussed SAW. It is evident that the resolution in z-axis (see Fig.1) direction is less than that in x-axis. The image also shows some structures which may have to do with the microscopic properties of the aluminum surface, such as differing porosity, grain structure or residual stress.

The second piece contains a line of holes of varying separation drilled from the back side to test the resolution of the system. The end of the holes are 0.5 mm from the front surface. The image obtained by scanning the line of 2 mm and 2.5 mm spaced holes is depicted in Fig.7. The z-axis of Fig.1. is perpendicular to the line of holes. This grating structure made of holes, with a periodicity equal to the SAW wavelength, is well resolved. The resolution of the system is less than a wavelength. On the other hand, the resolution along the z-axis is not as good as this, but 2 mm spaced holes can still be resolved in that direction.

DISCUSSION

The imaging system described above is different from popular imaging systems like the scanning acoustic microscope[1] or the scanning laser acoustic microscope, in that it is a "zero-background" system. When the SAW focus is at a point where there are no inhomogeneities or surface irregularities, no signal will reflect, and hence the response of the imaging system will be zero. There will be signal only if there is something different on the focal point that will cause a reflection of SAW. In the scanning acoustic microscope, there will be a signal even when the surface under consideration is perfect. To find defects one needs to measure the minute changes on top of a large signal. This requires an extremely stable mechanical scan system.

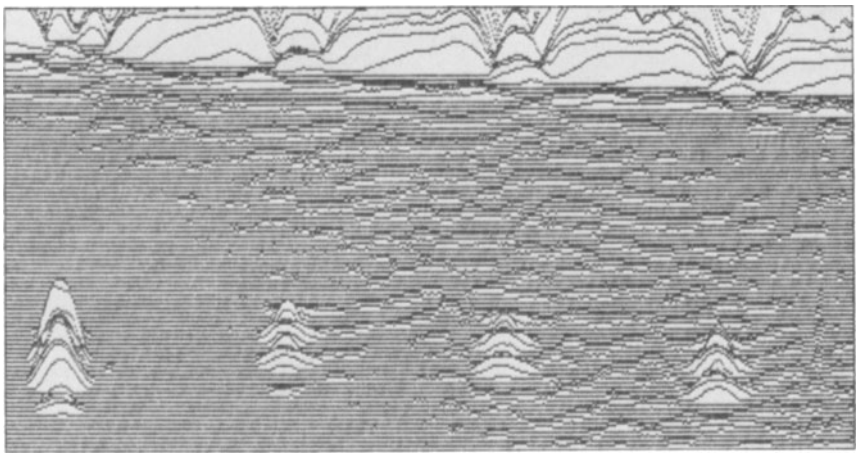

(a)

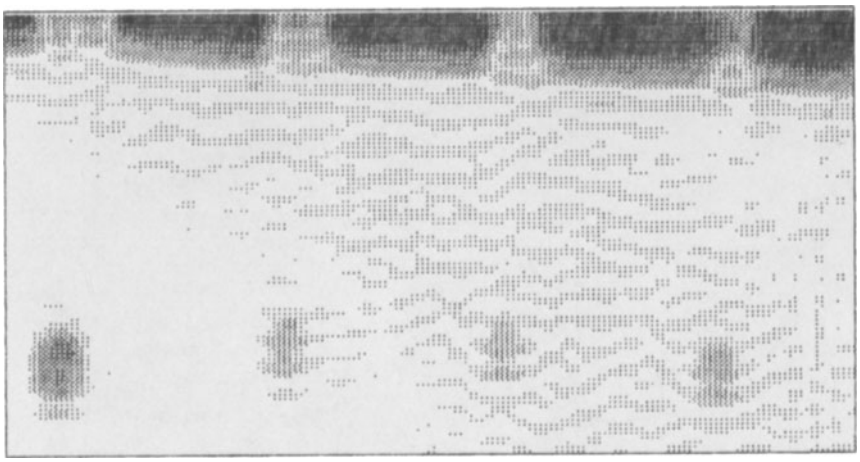

(b)

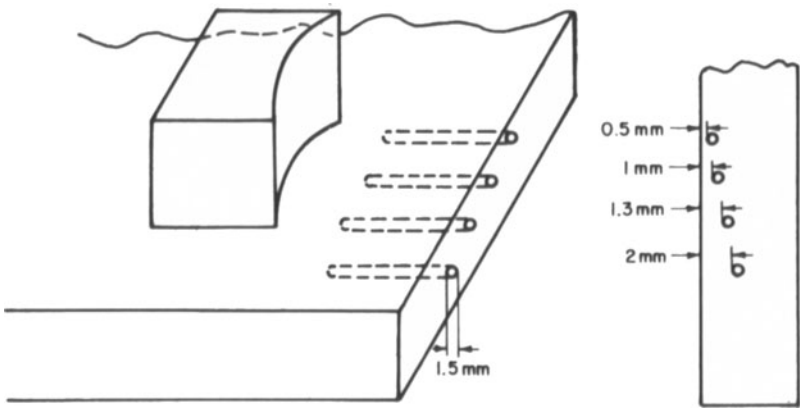

(c)

Fig.5. SAW images using two different display techniques, (a) and (b), of the aluminum phantom shown in (c).

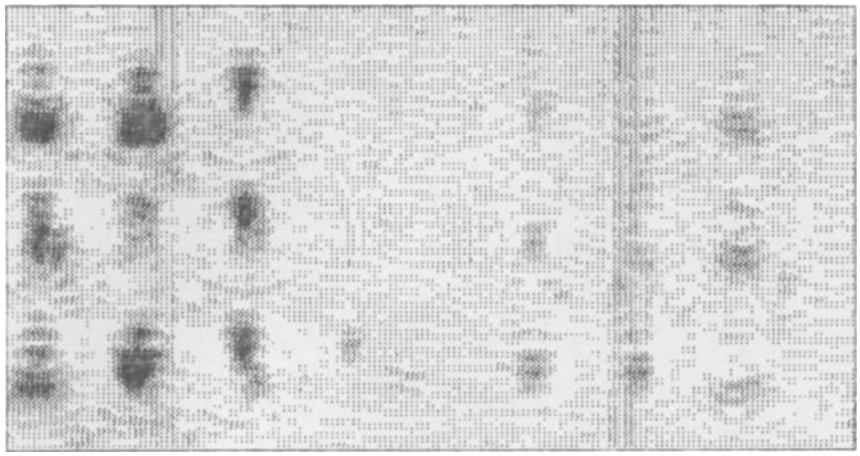

(a)

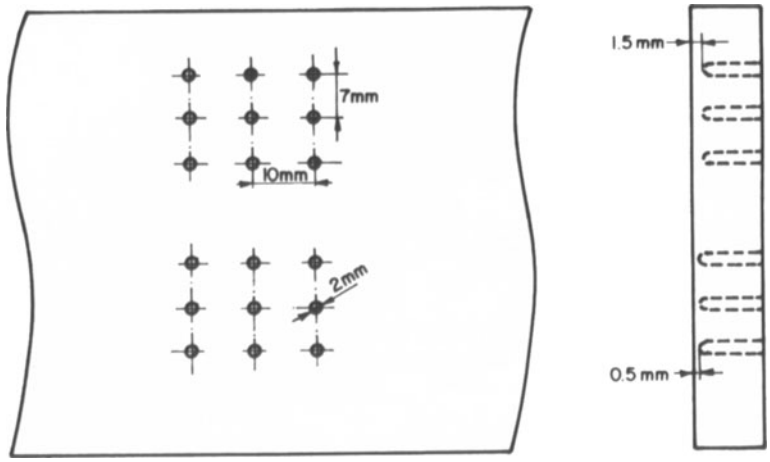

(b)

Fig.6. SAW image (a) of an aluminum phantom surface (b).

On the other hand, using focussed SAW, one may expect to get images full of artifacts, if the surface under consideration is rich in structures (e.g. surfaces of integrated circuits). Such surfaces are more appropriate for a bulk wave focussing lens. SAW images will be meaningful and easily interpreted if the object surface is mainly smooth (e.g. a coated surface of a magnetic disk) and has defects (cracks, etc) below the surface. In this case, any presence of signal will indicate a defect. The magnitude of the signal can be related to the size or depth of the defect.

The detection of flaws in metals which are very close to surface is difficult by acoustic techniques using bulk waves, due to the presence of strong reflection at the interface. In such systems, the acoustic mismatch at the interface causes most of the incident energy be reflected. Only a small fraction of the energy is coupled into the medium. The interface reflection invades any reflection of flaws close to the surface. In our imaging technique almost all the energy is converted into SAW and is used for imaging. Since there is no significant background, the system is inherently sensitive to flaws close to the surface. When flaws which are away from the surface are to be detected, our imaging system is not very appropriate and in that case bulk wave imaging systems must be preferred.

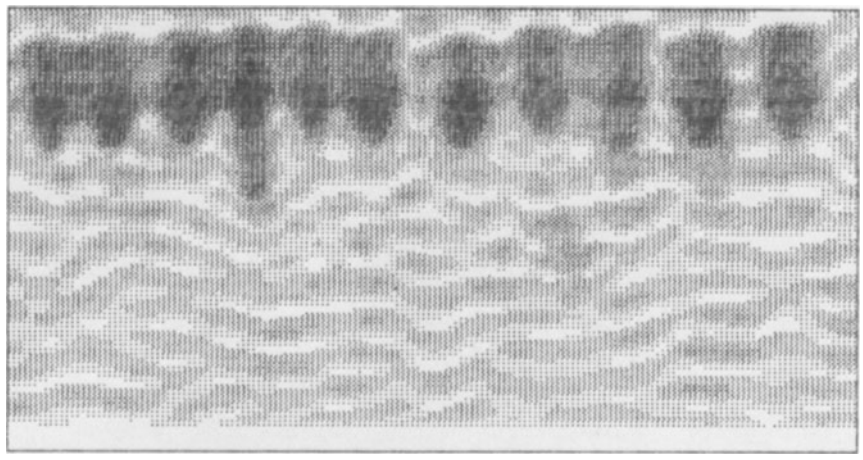

Fig.7. SAW image of 2 mm and 2.5 mm spaced subsurface holes.

It is possible to increase the resolution of the imaging system by increasing the operation frequency. Initial experiments at 20 MHz indicate that it is possible to use this technique at least up to 100 MHz. When used in this frequency range, it can be employed as a new type of lens in acoustic microscopy.

ACKNOWLEDGEMENTS

This work is supported by TUBITAK. We acknowledge Hüseyin Yavuz, Tolga Çiloglu and Bülent Mutlugil who built the imaging system. We thank Ernst Leitz Wetzlar GmbH, W.Germany for donating us the scan mechanics used in the experimental system.

REFERENCES

1. C.F.Quate, A.Atalar, K.Wickramasinghe, "Acoustic microscopy with mechanical scanning- A review" Proc. of IEEE, 67: 1092 (1979).
2. W.Parmon and H.L.Bertoni, "Ray interpretation of material signature in the acoustic microscope" Elect.Lett., 15: 685 (1979).
3. A.Atalar "Penetration depth of the scanning acoustic microscope" IEEE Trans. Son. Ultrason. 32: 164 (1985).
4. V.B.Jipson "Acoustic microscopy of interior planes" Appl.Phys.Lett. 35: 385 (1979).
5. I.R.Smith, H.K.Wickramasinghe, G.W.Farnell and C.K.Jen "Confocal surface acoustic wave microscopy" Appl.Phys.Lett. 42: 411 (1983).
6. B.Nongaillard, M.Ourak, J.M.Rouvaen, M.Houze and E.Bridoux "A new focusing method for nondestructive evaluation by acoustic surface wave" J.Appl.Phys. 55: 75 (1984).
7. C.K.Jen, P.Cielo, J.Bussiere, F.Nadeau and G.W.Farnell, Appl.Phys.Lett. 46: 241 (1985).
8. H.Koymen and A.Atalar, "Focussing surface waves using axicons" Appl.Phys.Lett. 47: 1266 (1985).
9. H.L.Bertoni and T.Tamir, "Unified theory of Rayleigh-angle phenomena for acoustic beams at liquid-solid interface" Appl.Phys. 2: 157 (1973).

10. J.Fraser, B.T.Khuri-Yakub, and A.R.Selfridge, Appl.Phys.Lett. 32: 698 (1978).
11. A.Atalar and H.Koymen, "Use of a conical axicon as surface acoustic wave focussing device" to be published in IEEE Trans. Ultrason. Freq. Cont. (1986).
12. L.M.Brekhovskikh, "Waves in layered media", 2. Ed., New York: Academic (1980).
13. F.C.Cuozzo, E.L.Cambiaggio, J-P Damiano, and E.Rivier "Influence of Elastic Properties on Rayleigh Wave Scattering by Normal Discontinuities" IEEE Trans. on Son. Ultrason. 24: 280 (1977).